2002 ACCESSORIES & EQUIPMENT

Interior Trim - Corvette

SPECIFICATIONS

FASTENER TIGHTENING SPECIFICATIONS

Application	Specification	
	Metric	English
Accelerator Pedal Stop Nuts	10 N·m	89 lb in
Extension Panel Bolts	4 N·m	35 lb in
Foot Rest Nuts	10 N·m	89 lb in
Front Luggage Support	2.5 N·m	22 lb in
Lock Pillar Upper Trim Screw	1.8 N·m	16 lb in
Rear Luggage Support Screw	4 N·m	35 lb in
Roof Stowage Bracket Bolts	8 N·m	71 lb in
Seat Belt Guide Bolt	41 N·m	31 lb ft
Upper Guide Nut	40 N·m	29 lb ft

G01734324

Fig. 1: Fastener Tightening Specifications
Courtesy of GENERAL MOTORS CORP.

REPAIR INSTRUCTIONS

KICK-UP PANEL REPLACEMENT - FRONT FLOOR

Removal Procedure

1. Disengage the kick-up panel upper latches.
2. Open the kick-up panel.
3. Lift the kick-up panel's lower edge up out of the slots in the multi-use relay bracket.
4. Remove the kick-up panel.

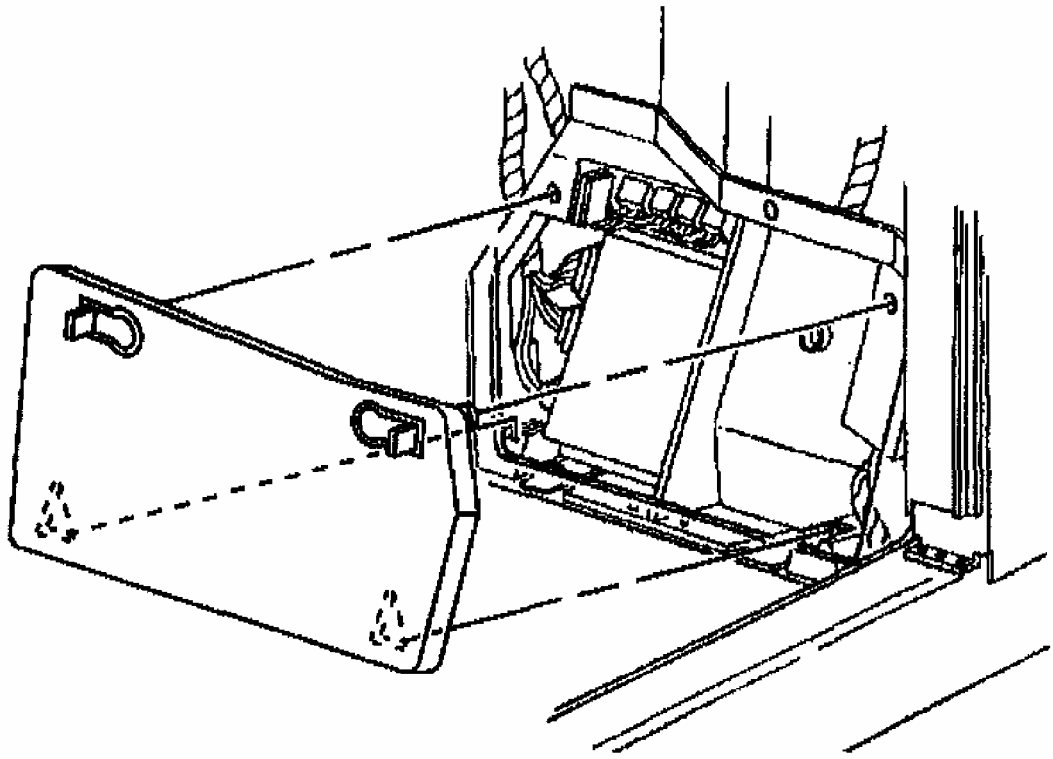

Fig. 2: Removing Kick-Up Panel
Courtesy of GENERAL MOTORS CORP.

Installation Procedure

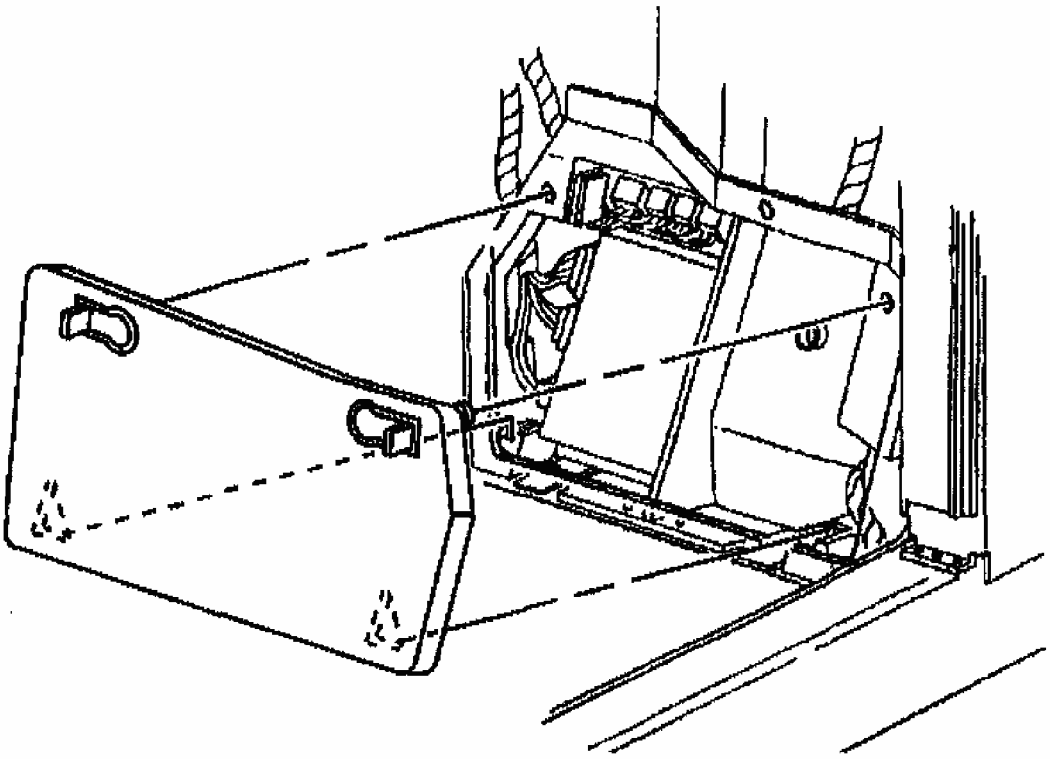

Fig. 3: Installing Kick-Up Panel
Courtesy of GENERAL MOTORS CORP.

1. Open the latches on the kick-up panel.
2. Position the kick-up panel to the opening in the floor and insert the kick-up panel lower tabs into the slots in the multi-use bracket.
3. Close the panel and push the latches into the holes.
4. Engage the latches.

FOOT REST REPLACEMENT

Removal Procedure

1. Remove the nut attaching the foot rest to the side rail.
2. Remove the nut attaching the foot rest to the dash panel stud.
3. Remove the foot rest.

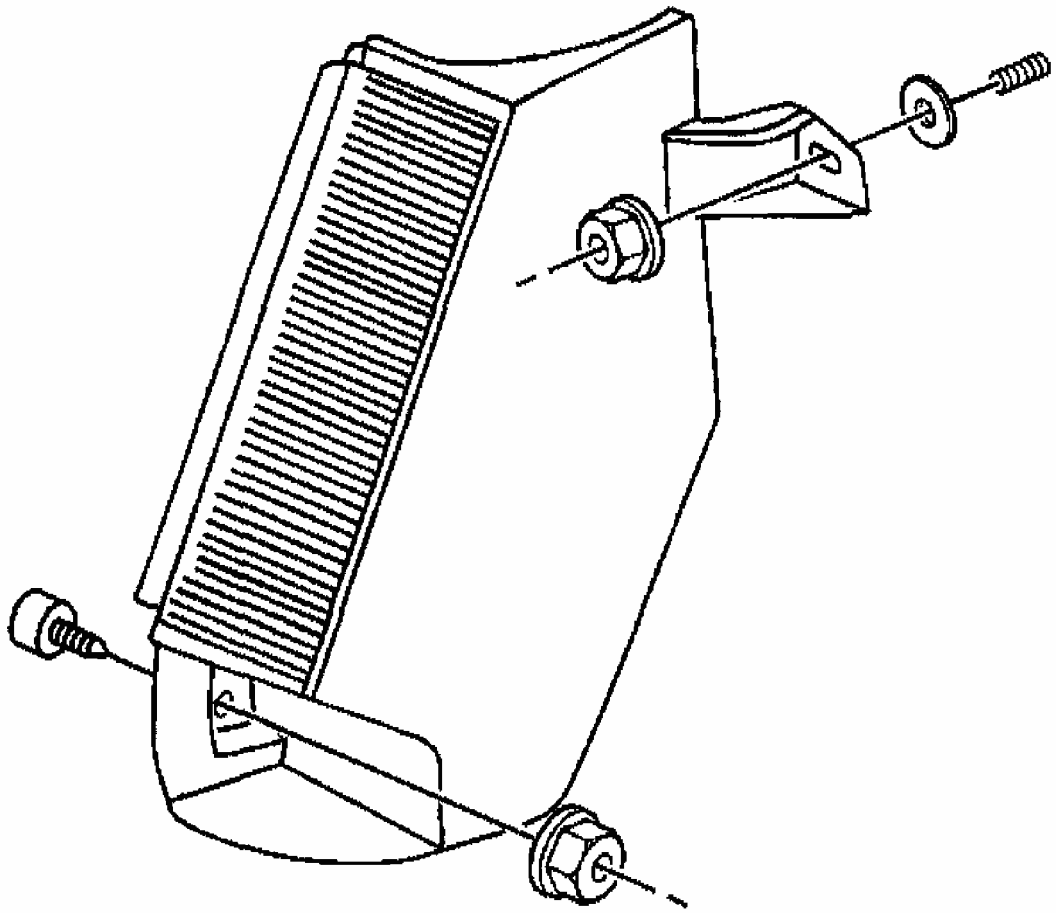

Fig. 4: Removing Foot Rest Retaining Nuts
Courtesy of GENERAL MOTORS CORP.

Installation Procedure

1. Place the spacer on the dash panel stud.
2. Position the foot rest over the spacer.

CAUTION: Refer to FASTENER NOTICE .

3. Install the nut to the stud.

Tighten

Tighten the foot rest nut to 10 N.m (89 lb in).

4. Install the nut to the side rail stud.

Tighten

Tighten the foot rest nut to 10 N.m (89 lb in).

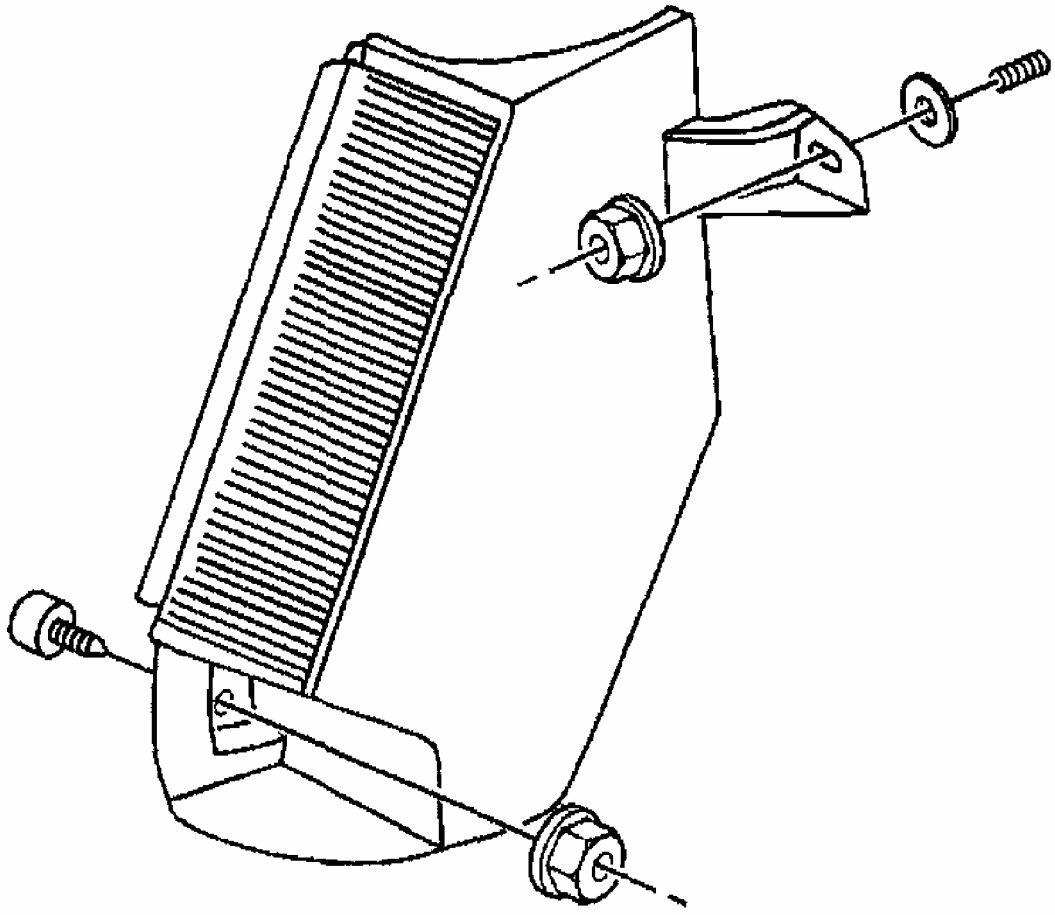

Fig. 5: Installing Foot Rest Retaining Nuts
Courtesy of GENERAL MOTORS CORP.

TRIM REPLACEMENT - HINGE PILLAR

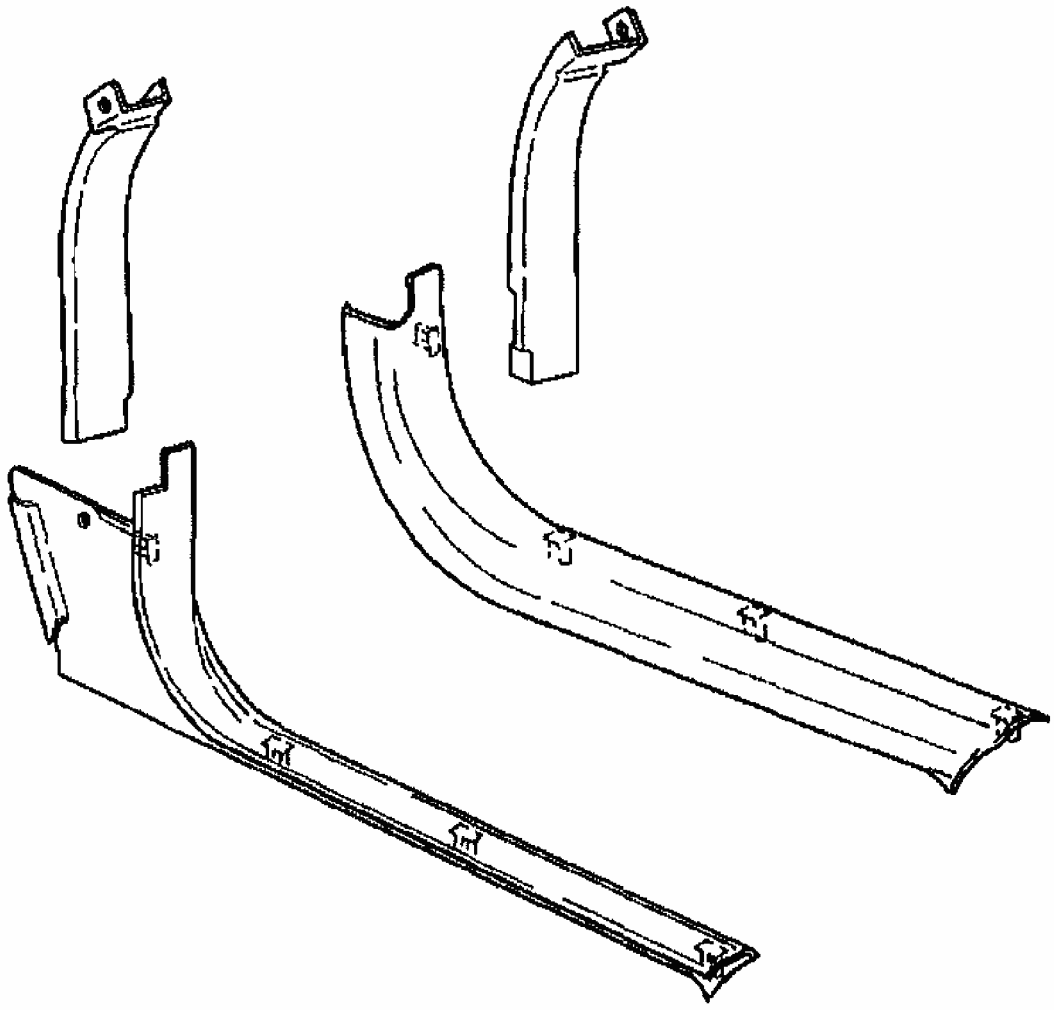

Fig. 6: Identifying Upper & Lower Hinge Pillar Trim
Courtesy of GENERAL MOTORS CORP.

Removal Procedure

1. Remove the fastener attaching the top of the upper trim panel and the windshield side garnish molding to the hinge pillar.
2. Unsnap the hinge pillar upper trim from the hinge pillar.
3. Remove the hinge pillar upper trim.
4. Remove the lower hinge pillar trim if needed. The lower trim is part of the sill plate. Refer to **Door Sill Plate Replacement** .

Installation Procedure

1. Snap the hinge pillar trim to the hinge pillar.
2. Install the fastener attaching the top of the trim.
3. Install the lower trim panel (sill plate) if removed. Refer to **Door Sill Plate Replacement** .

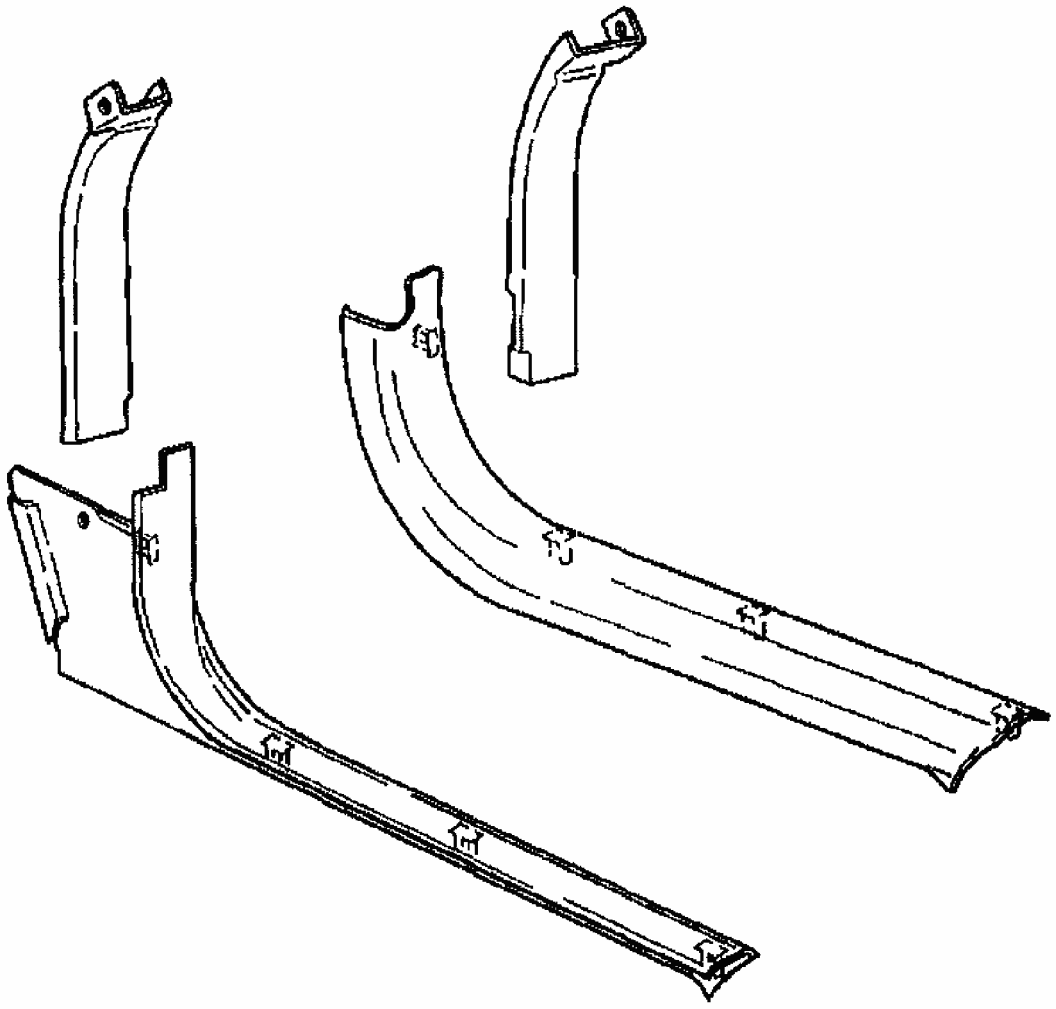

Fig. 7: Identifying Upper & Lower Hinge Pillar Trim
Courtesy of GENERAL MOTORS CORP.

TRIM REPLACEMENT - LOCK PILLAR (UPPER CONVERTIBLE)

Removal Procedure

1. Open the upper guide bolt cover by prying up at the belt side of the cover.
2. Remove the nut attaching the upper guide to the seat belt guide bracket stud.

3. Remove the seat belt upper guide from the stud.

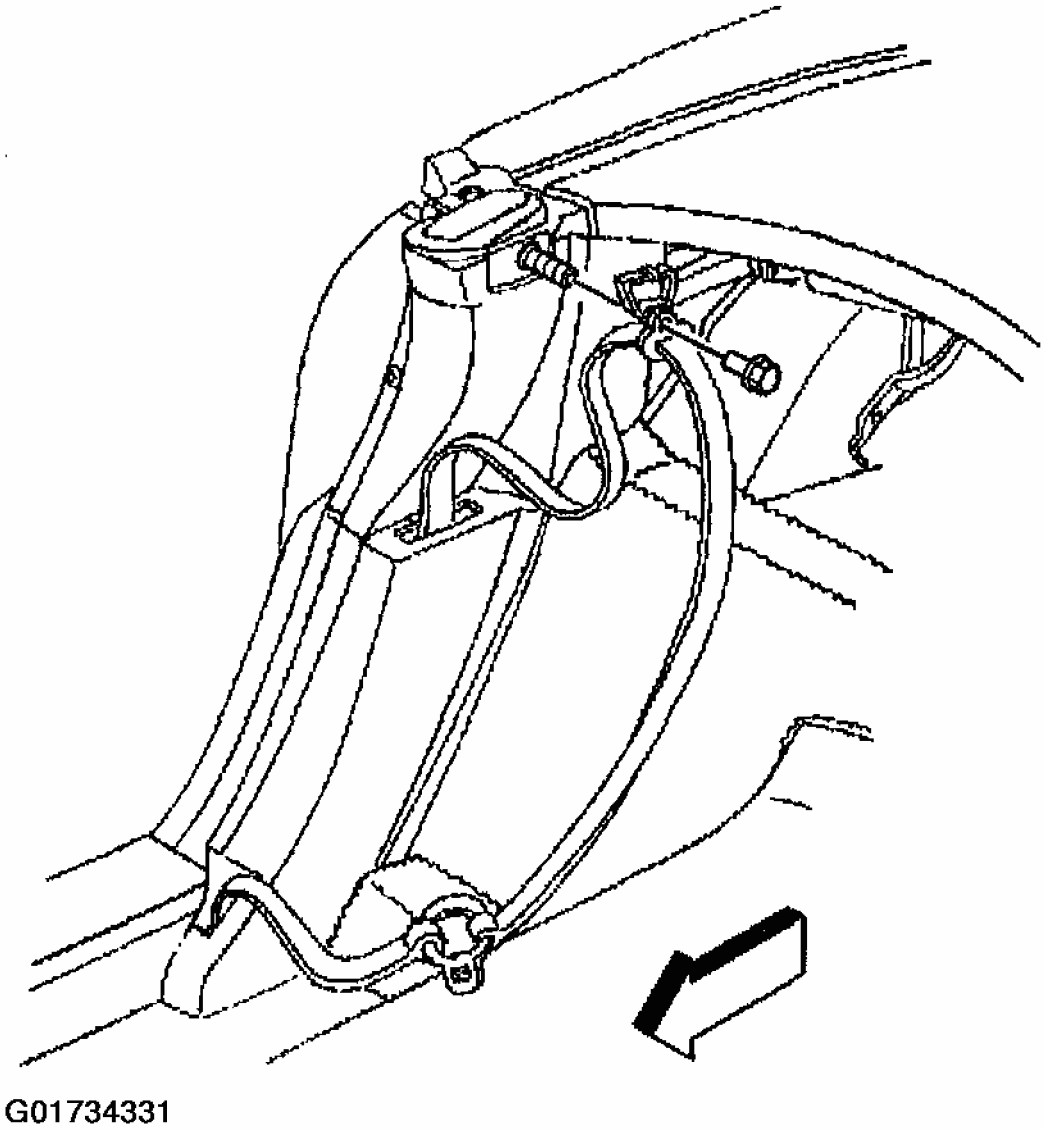

Fig. 8: Removing Upper Seat Belt Guide Retaining Nut
Courtesy of GENERAL MOTORS CORP.

4. Remove the spacer and washer from the stud.
5. Remove the screw attaching the lock pillar upper trim.
6. Remove the upper trim.

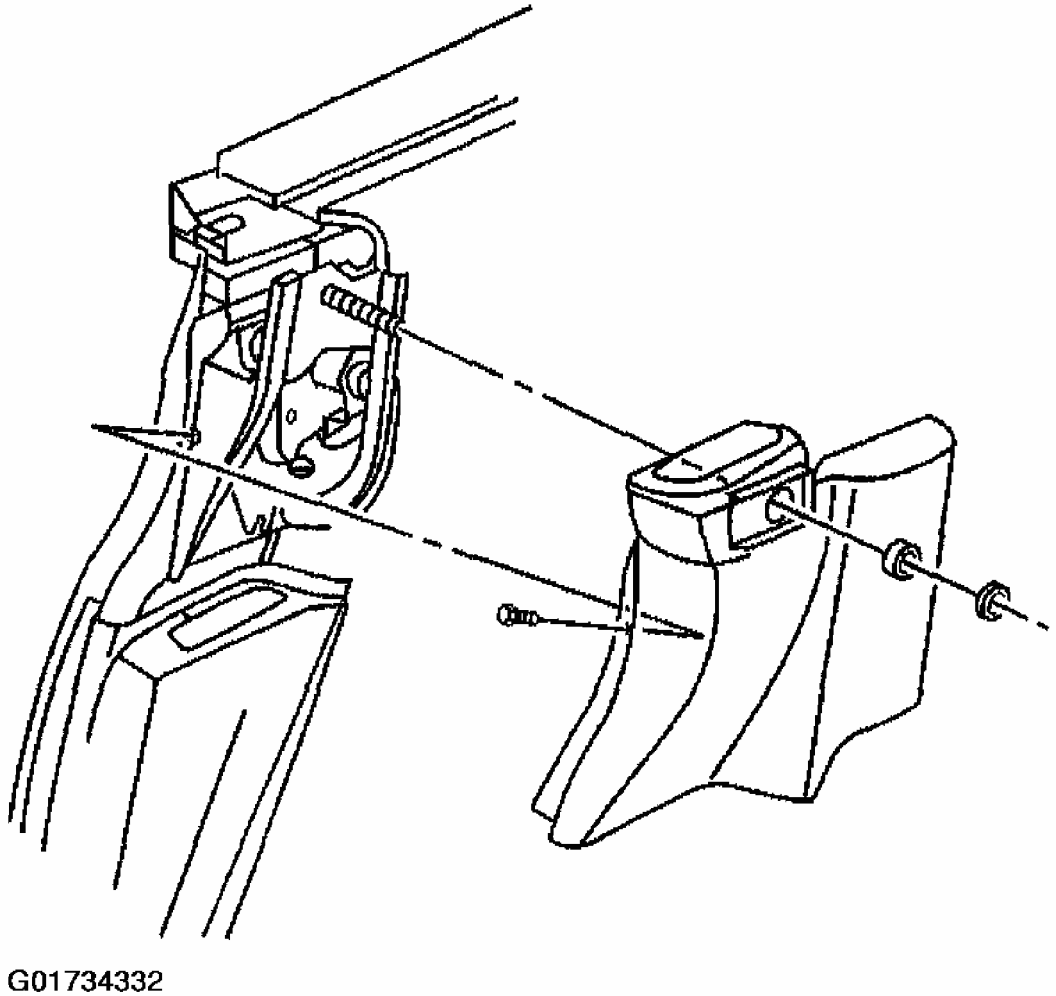

Fig. 9: Removing Seat Belt Guide Bracket Stud Spacer
Courtesy of GENERAL MOTORS CORP.

Installation Procedure

1. Install the lock pillar upper trim.

   CAUTION: Refer to FASTENER NOTICE .

2. Install the screw securing the upper trim to the lock pillar.

   Tighten

   Tighten the lock pillar upper trim screw to 1.8 N.m (16 lb in).

3. Install the spacer and washer to the seat belt guide stud.

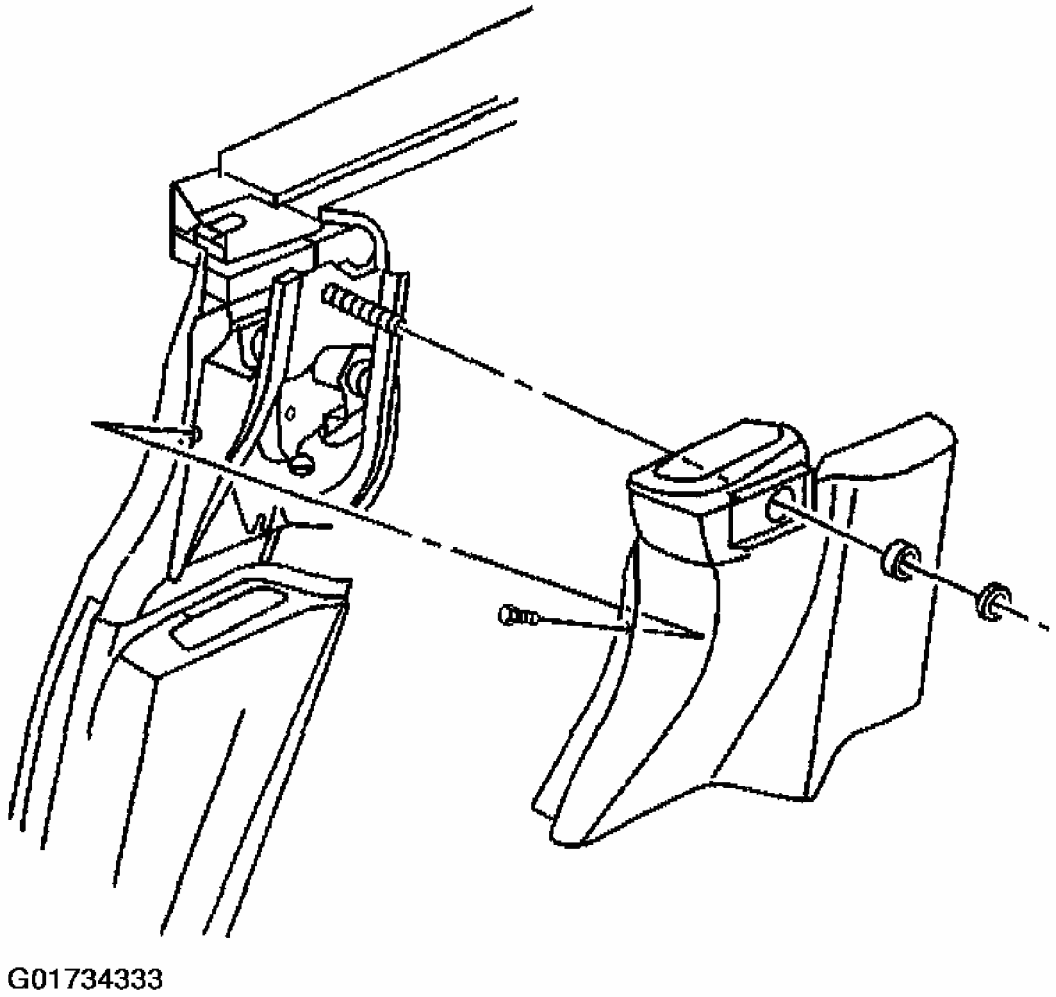

Fig. 10: Installing Lock Pillar Upper Trim Screw
Courtesy of GENERAL MOTORS CORP.

4. Install the upper seat belt guide.

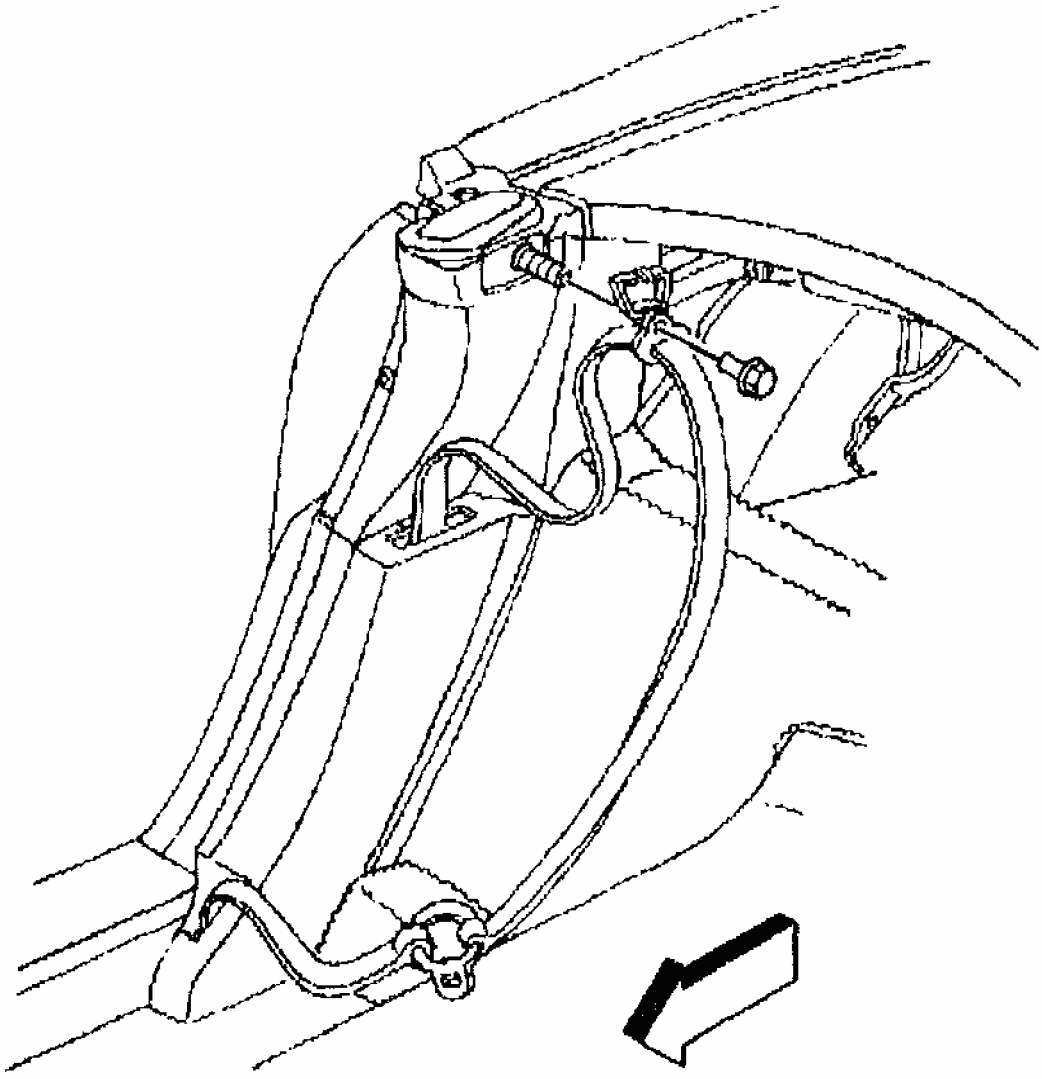

Fig. 11: Installing Upper Seat Belt Guide Retaining Nut
Courtesy of GENERAL MOTORS CORP.

Tighten

Tighten the upper guide nut to 40 N.m (29 lb ft).

TRIM REPLACEMENT - LOCK PILLAR (COUPE)

Removal Procedure

1. Remove the sill plate. Refer to **Door Sill Plate Replacement** .
2. Pull the lock pillar trim panel with retainers from the lock pillar and the side rail.

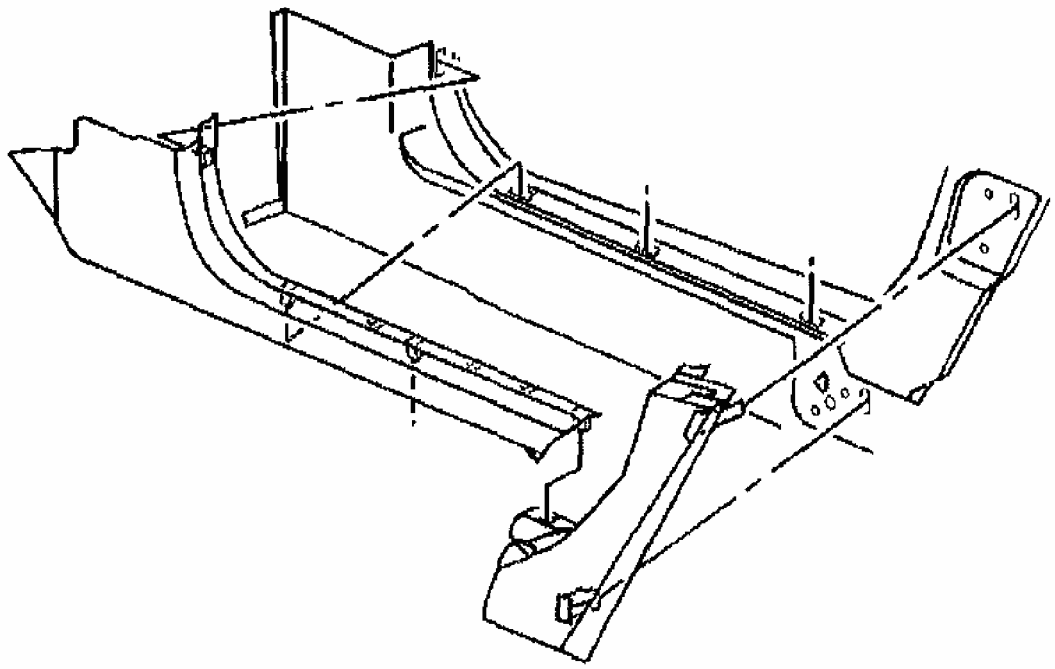

G01734335

Fig. 12: Locating Lock Pillar Trim Panel Retainers
Courtesy of GENERAL MOTORS CORP.

3. Slide the lock pillar trim out from under the rear compartment side trim panel.
4. Separate the trim panel from the seat belt.
5. Remove the lock pillar trim.

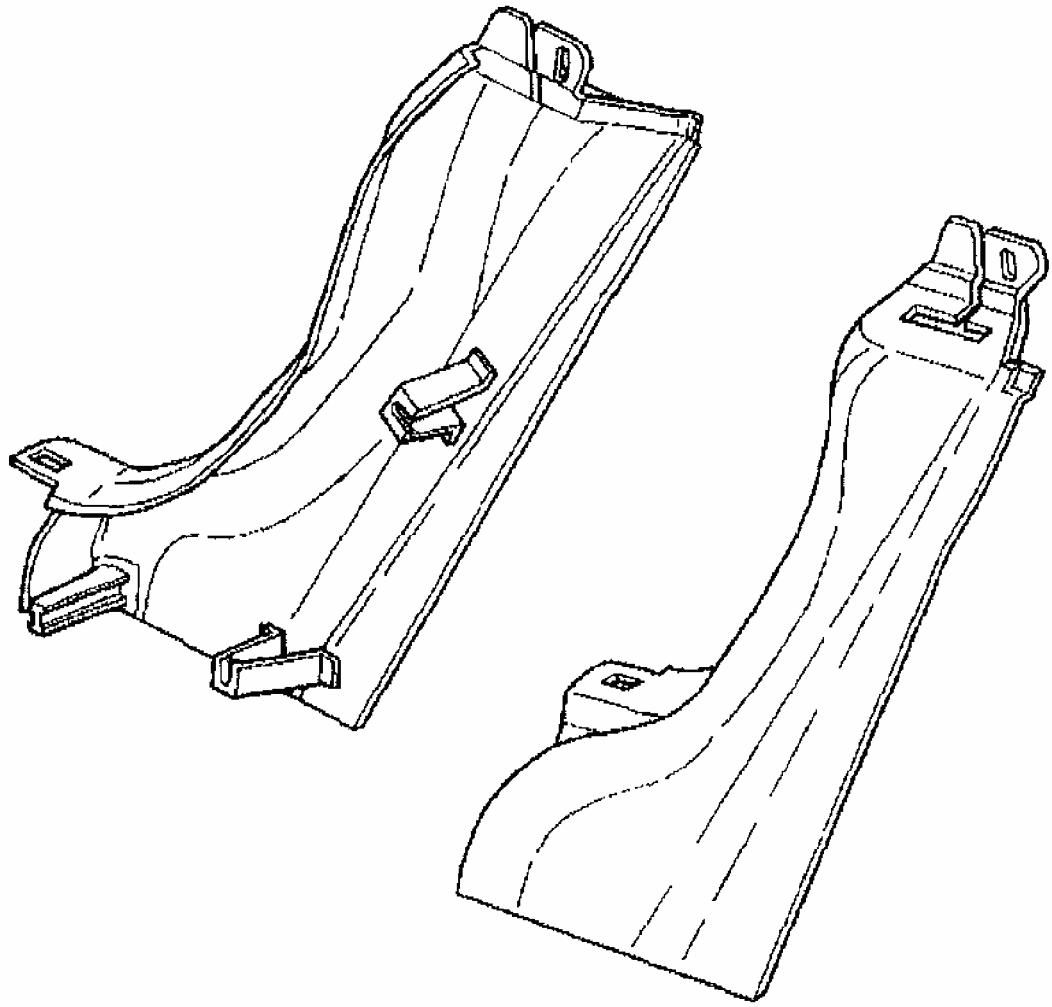

Fig. 13: Identifying Lock Pillar Trim
Courtesy of GENERAL MOTORS CORP.

Installation Procedure

1. Route the seat belt through the lock pillar trim panel.
2. Position the lock pillar trim panel under the rear compartment side trim panel.
3. Position the lock pillar trim panel retainers to the holes in the lock pillar and the side rail.

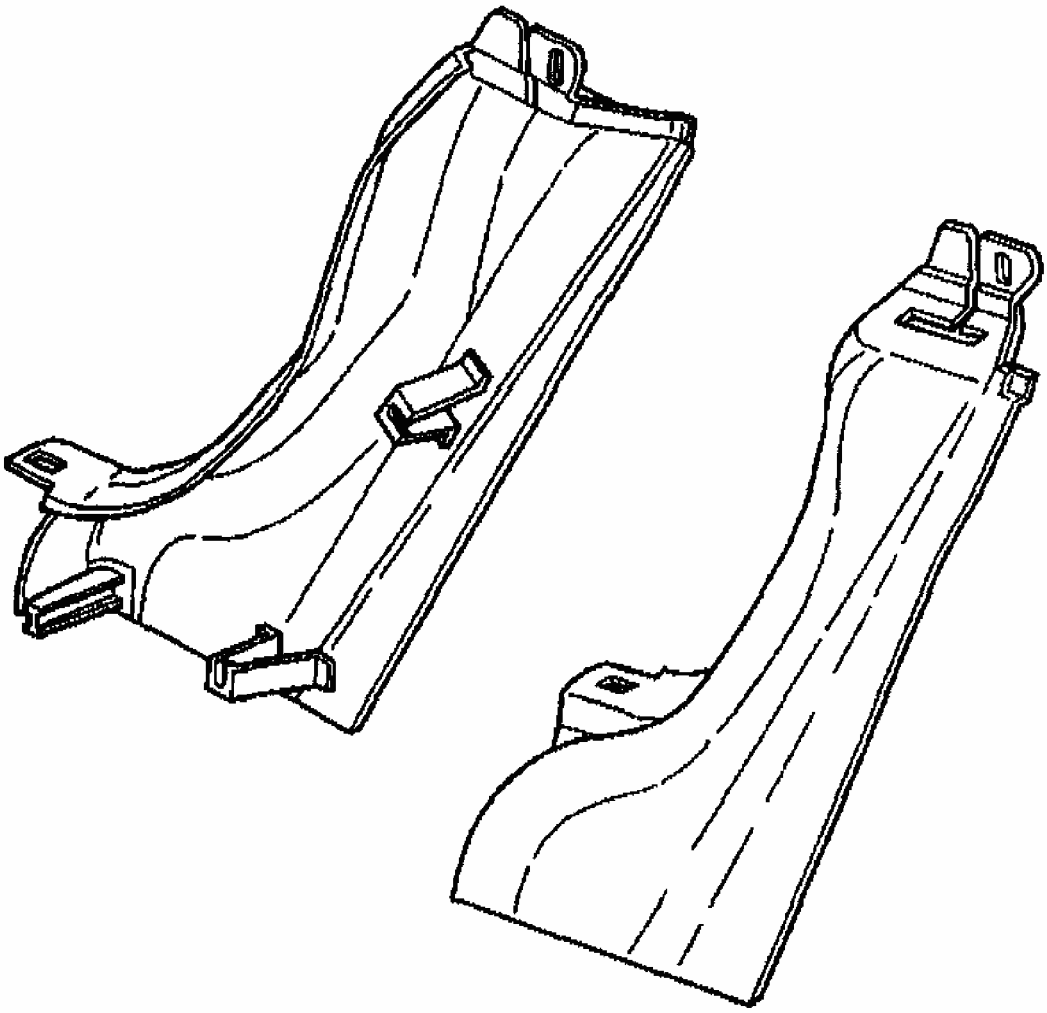

Fig. 14: Identifying Lock Pillar Trim
Courtesy of GENERAL MOTORS CORP.

4. Push in on the panel securing the retainers.
5. Install the sill plate. Refer to **Door Sill Plate Replacement** .

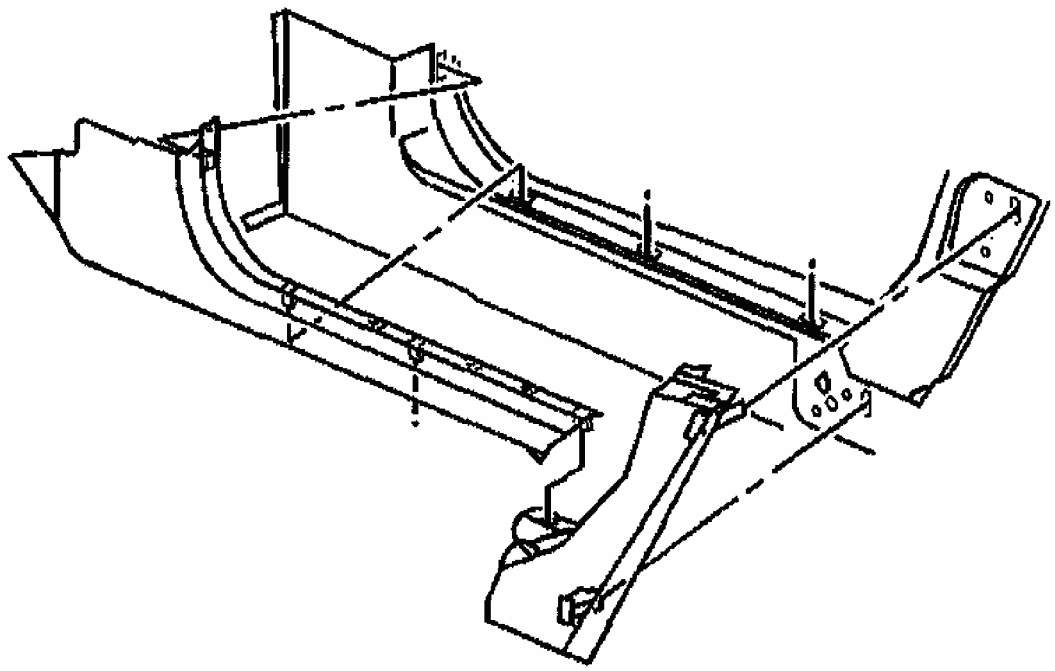

G01734338

Fig. 15: Locating Lock Pillar Trim Panel Retainers
Courtesy of GENERAL MOTORS CORP.

TRIM REPLACEMENT - LOCK PILLAR (LOWER CONVERTIBLE & HARD TOP)

Removal Procedure

1. Remove the sill plate. Refer to **Door Sill Plate Replacement** .
2. Pull the lock pillar trim panel with retainers from the lock pillar and the side rail.

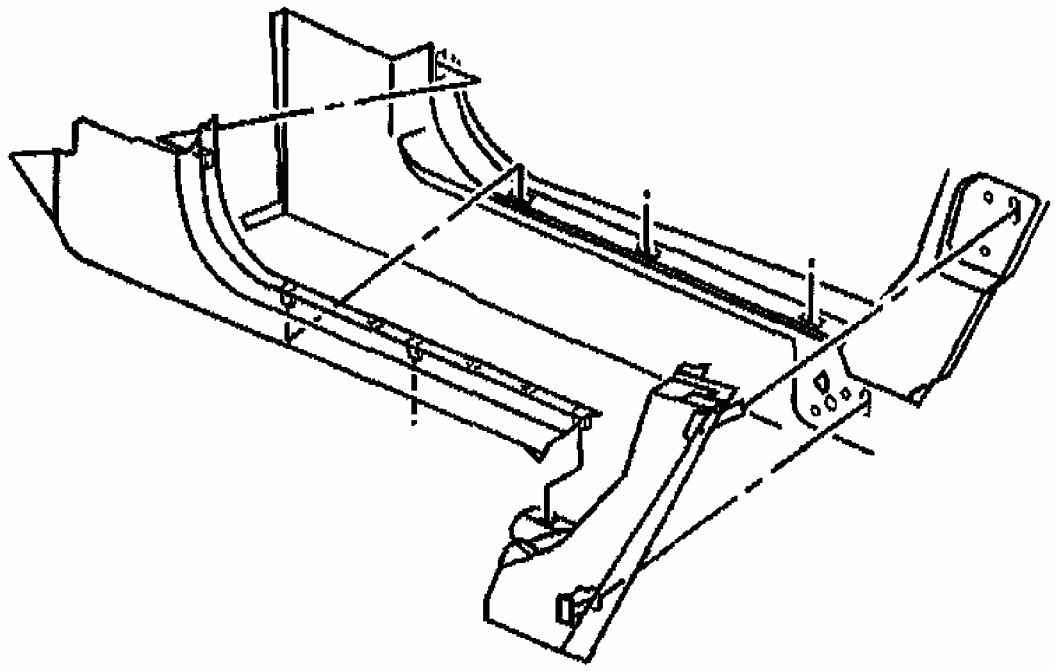

G01734339

Fig. 16: Locating Lock Pillar Trim Panel Retainers
Courtesy of GENERAL MOTORS CORP.

3. Slide the lower lock pillar trim out from under the upper lock pillar trim panel (convertible), or rear side panel (hard top).
4. Separate the trim panel from the seat belt.
5. Remove the lock pillar trim.

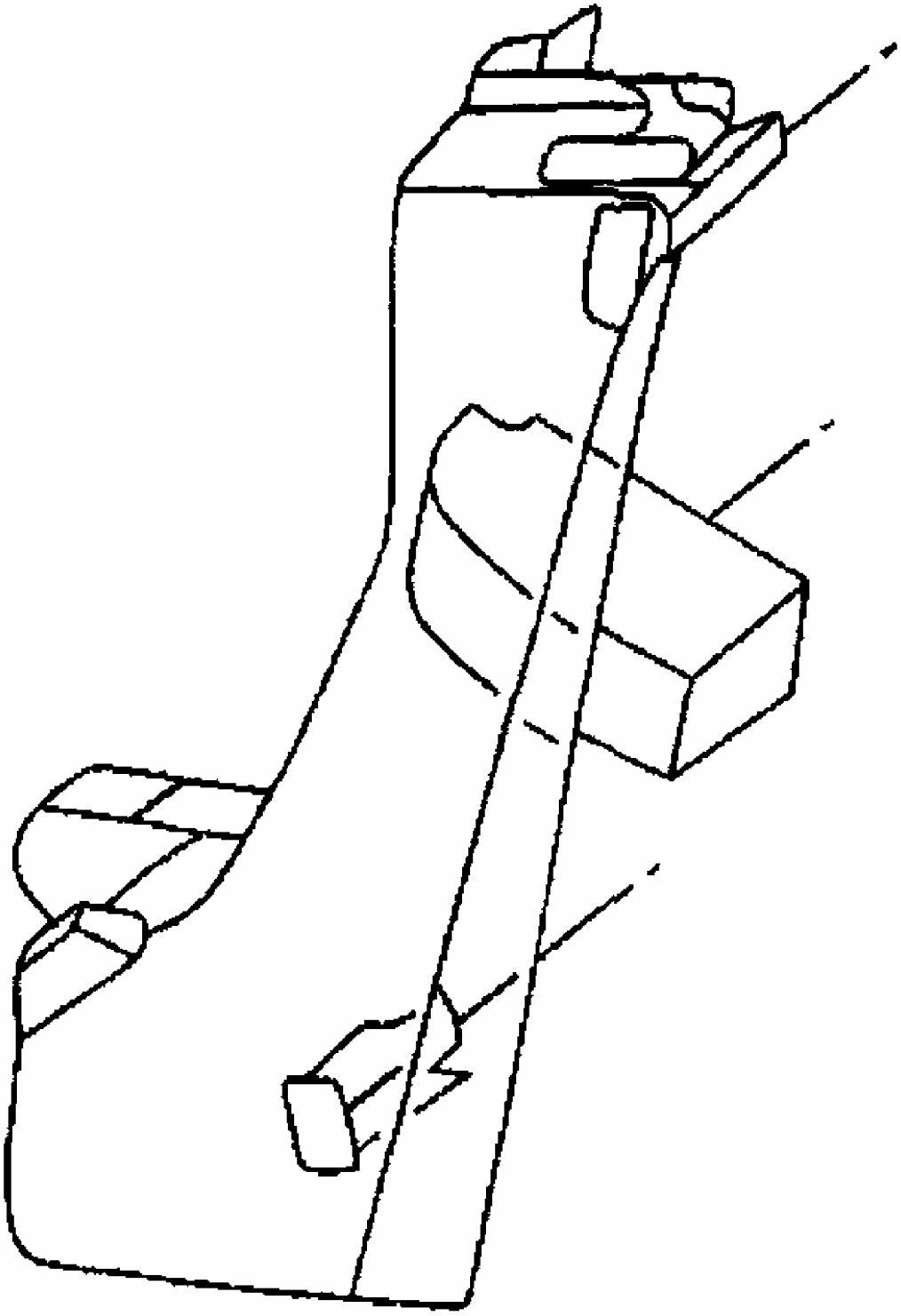

G01734340

Fig. 17: Identifying Lower Lock Pillar Trim & Foam Insulator
Courtesy of GENERAL MOTORS CORP.

Installation Procedure

1. Route the seat belt through the lock pillar trim panel.
2. Position the lower lock pillar trim panel under the upper lock pillar trim panel (convertible), or side trim panel (hard top).
3. Install the foam insulator behind the lock pillar trim.
4. Position the lock pillar trim panel retainers to the holes in the lock pillar and the side rail.

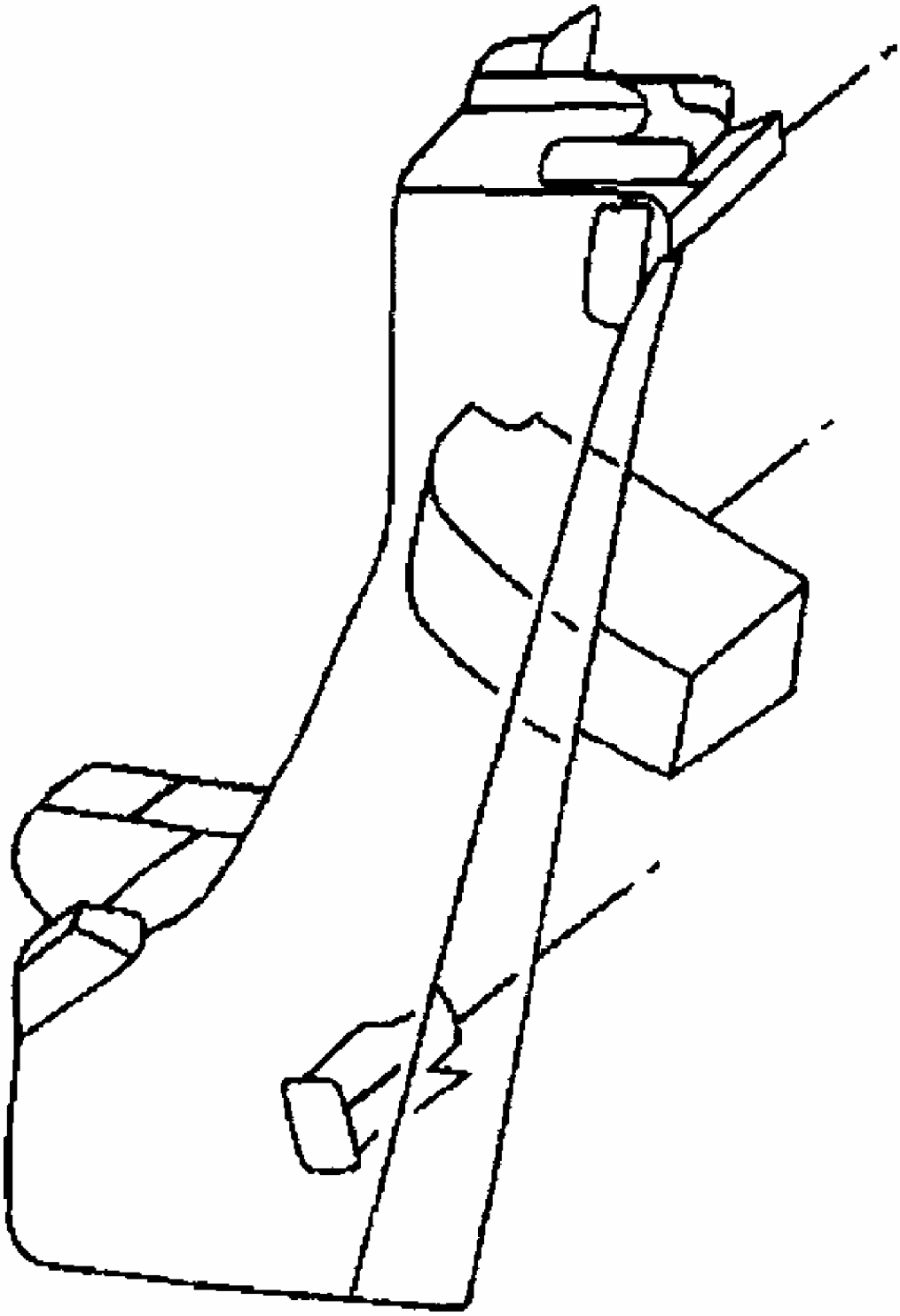

G01734341

Fig. 18: Identifying Lower Lock Pillar Trim & Foam Insulator
Courtesy of GENERAL MOTORS CORP.

5. Push in on the panel securing the retainers.
6. Install the sill plate. Refer to **Door Sill Plate Replacement** .

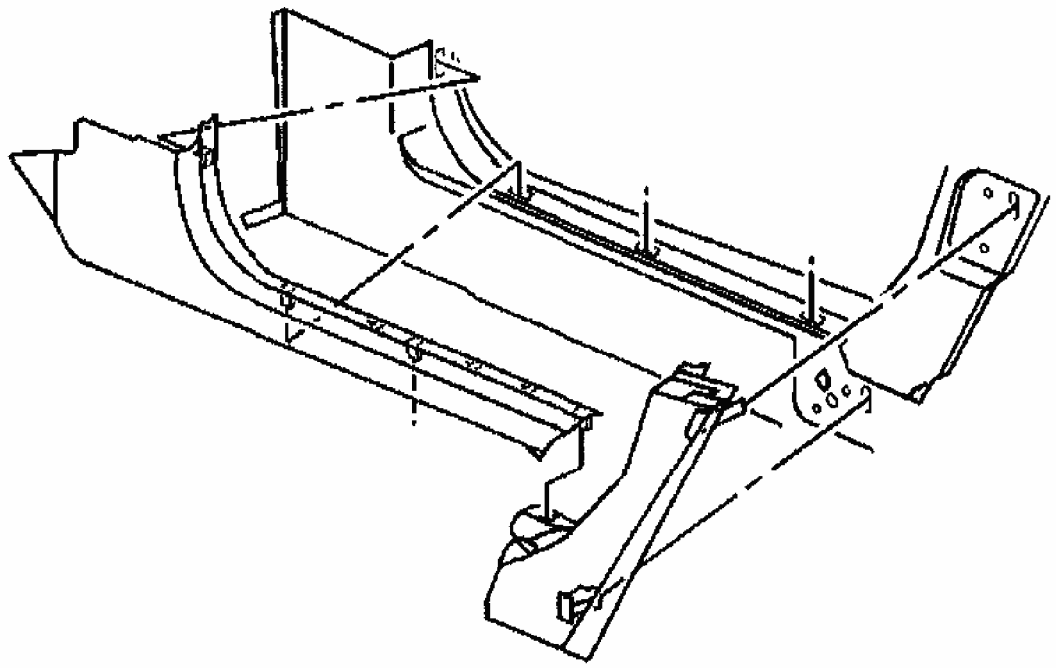

G01734342

Fig. 19: Locating Lock Pillar Trim Panel Retainers
Courtesy of GENERAL MOTORS CORP.

COMPARTMENT LID EXTENSION - FOLDING TOP STOWAGE

Removal Procedure

1. Open the folding top stowage compartment lid.
2. Remove the screws attaching the lower sides of the extension panel.
3. Remove the screws attaching the top of the extension panel.
4. Remove the panel upward from the bracket.

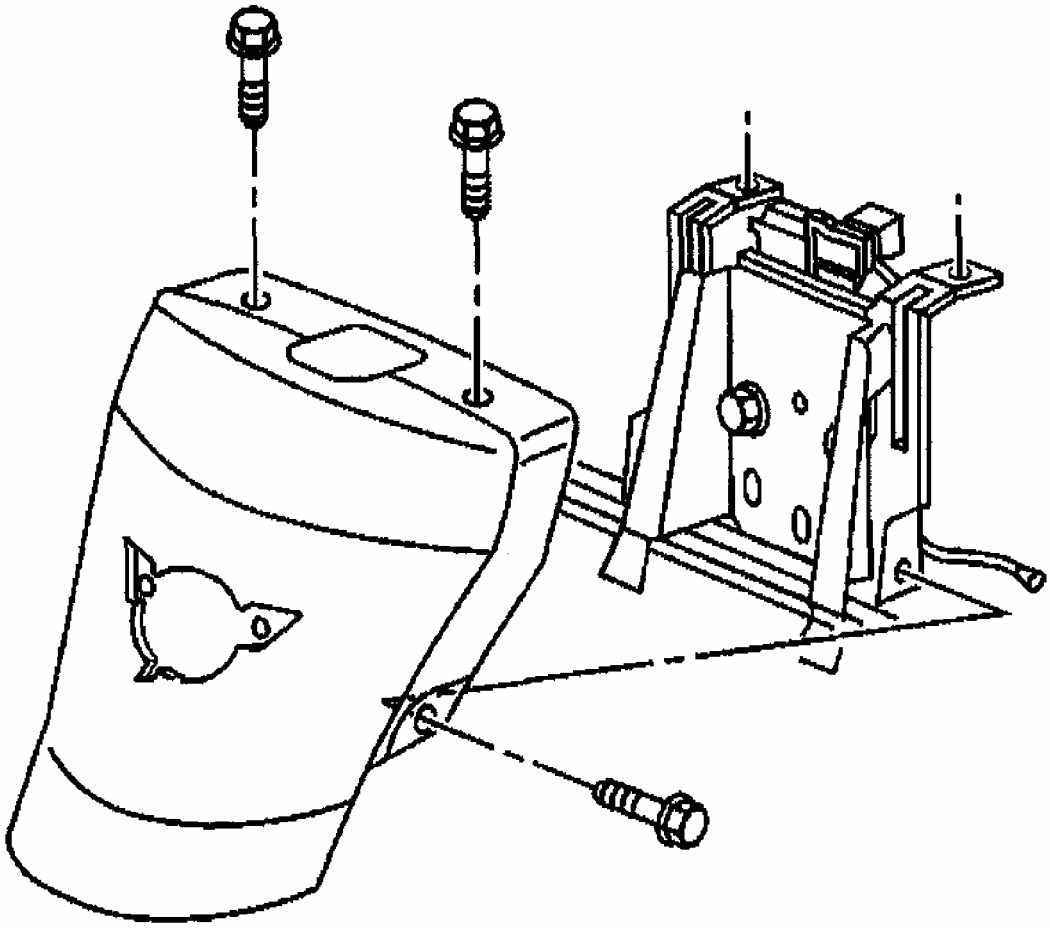

Fig. 20: Removing Extension Panel Screws
Courtesy of GENERAL MOTORS CORP.

Installation Procedure

1. Position the extension panel to the bracket with the latch manual release cable extending out from under the panel.

   CAUTION: Refer to FASTENER NOTICE .

2. Install the bolts attaching the extension panel to the bracket.

   Tighten

   Tighten the extension panel bolts to 4 N.m (35 lb in).

3. Closed the folding top stowage compartment lid.

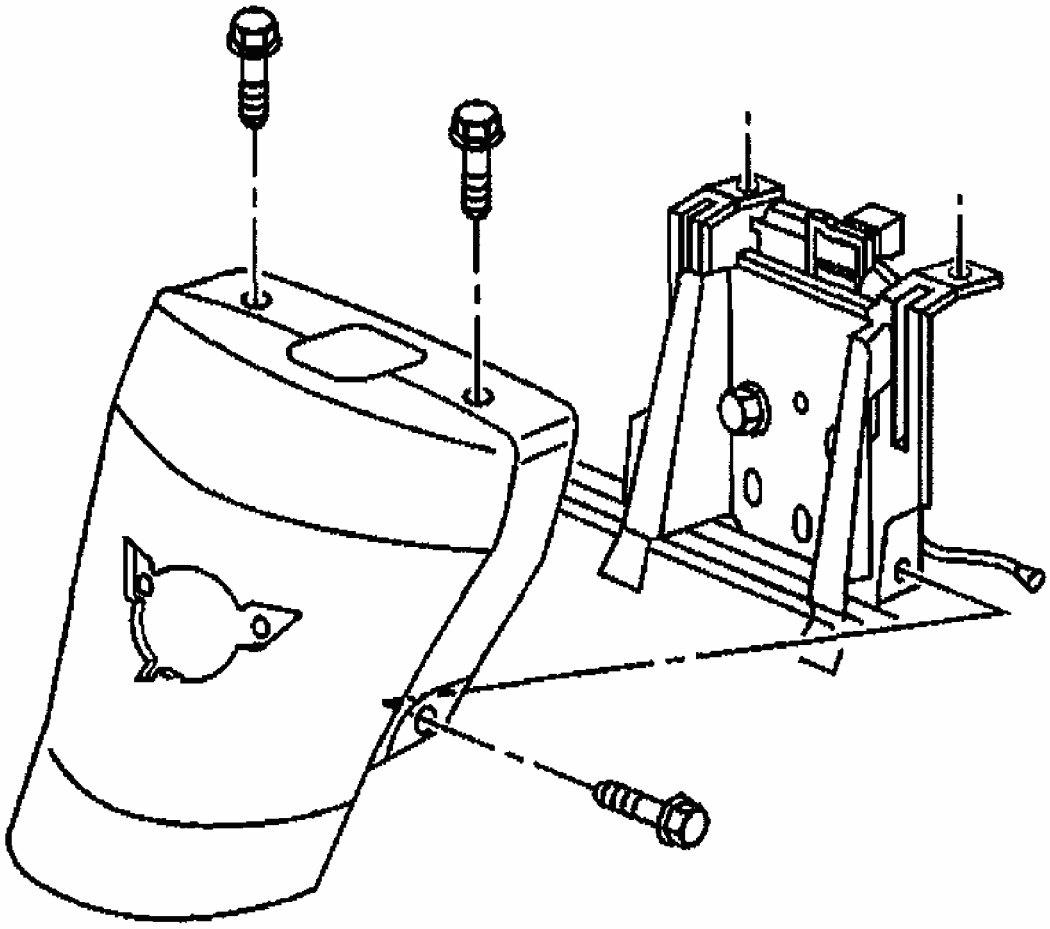

Fig. 21: Installing Extension Panel Screws
Courtesy of GENERAL MOTORS CORP.

DOOR SILL PLATE REPLACEMENT

Removal Procedure

1. Starting at the lock pillar lift the sill plate unsnapping the clips from the door opening finish trim panel.
2. Unsnap the sill plate from the hinge pillar.
3. Slide the sill plate out from under the hinge pillar upper trim, and on the drivers side out from around the hood release handle and the foot rest.

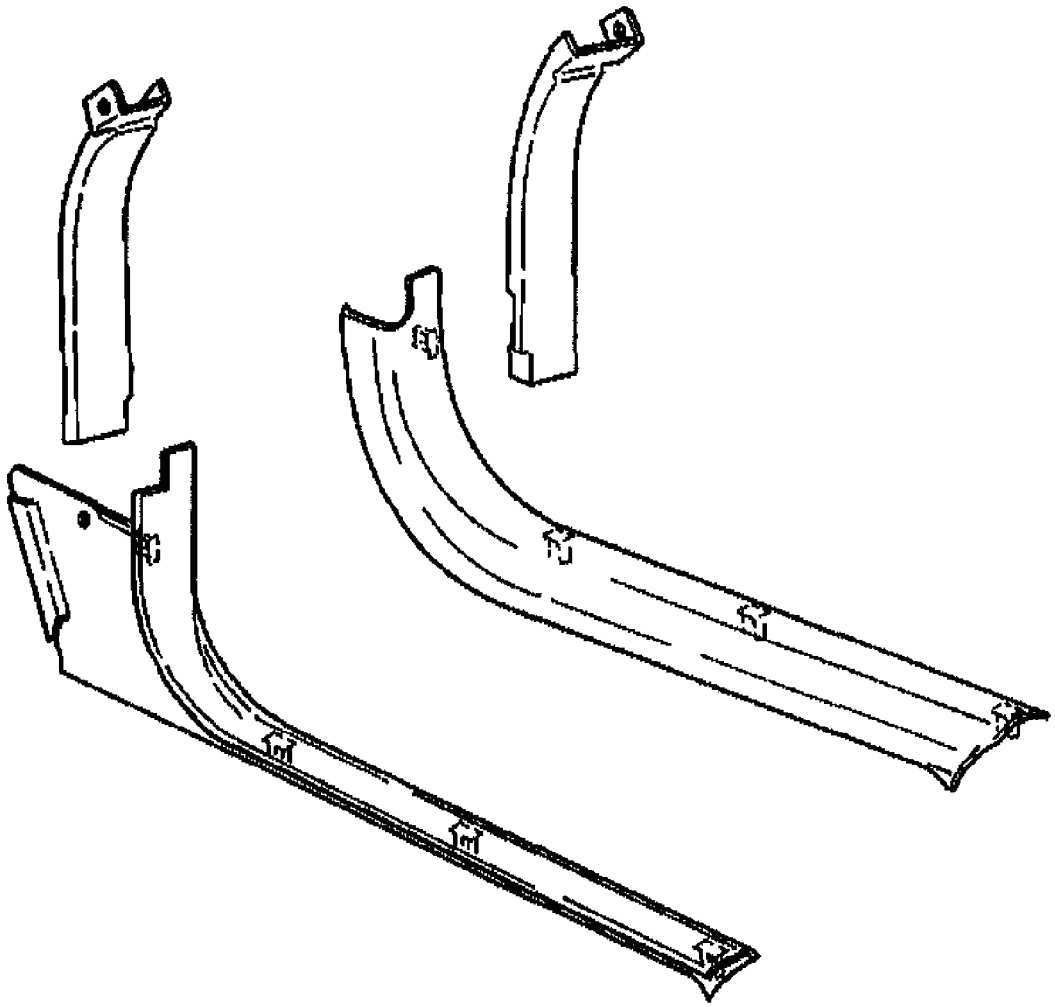

Fig. 22: Identifying Upper & Lower Hinge Pillar Trim
Courtesy of GENERAL MOTORS CORP.

Installation Procedure

1. Position the front of the sill plate under the hinge pillar upper trim with the rear of the sill plate tilted up.
2. Lower the rear of the sill plate inserting the front of the sill plate behind the hood release handle and the foot rest (drivers side).
3. Push forward on the sill plate aligning the sill plate retainers with the slots in the door opening finish trim panel.
4. Snap the sill trim plate into the hinge pillar first and then into the door opening finish trim panel.

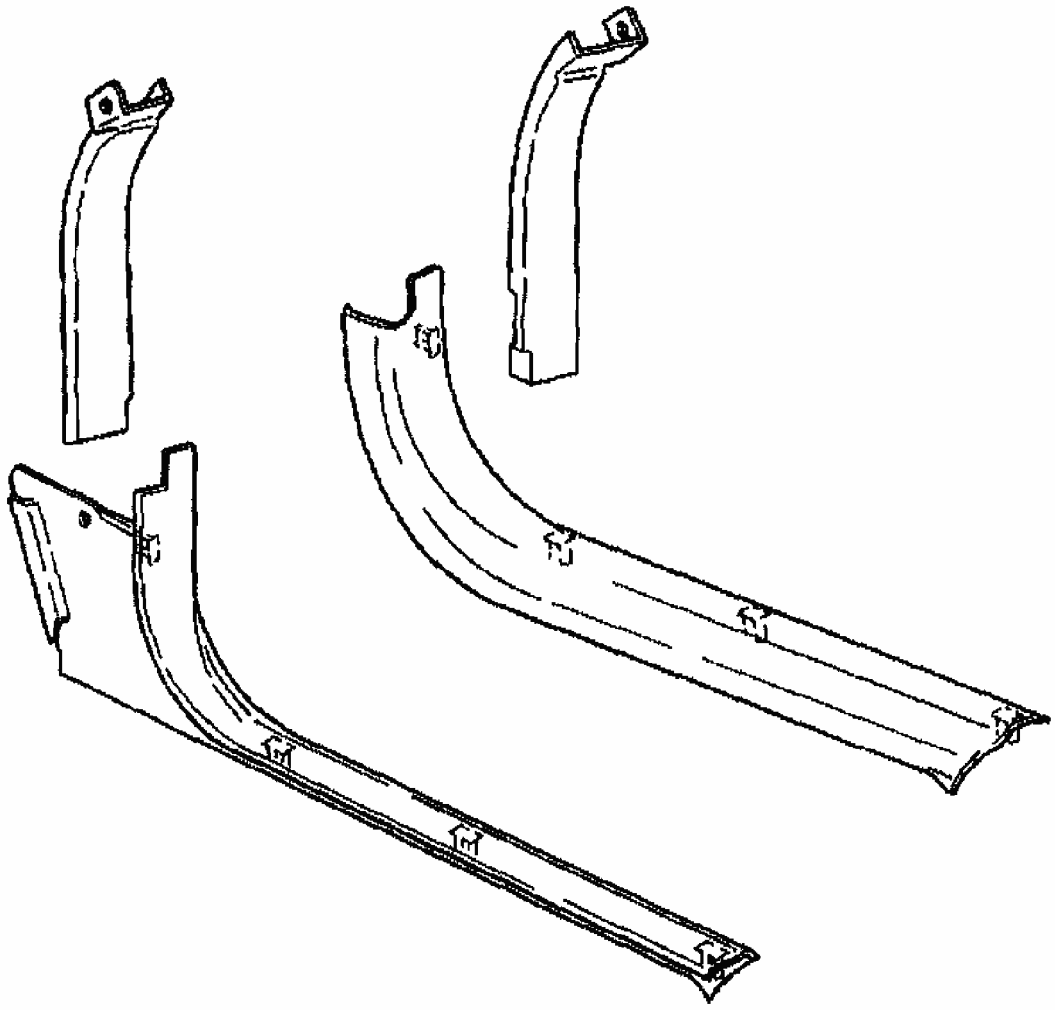

Fig. 23: Identifying Upper & Lower Hinge Pillar Trim
Courtesy of GENERAL MOTORS CORP.

FLOOR CARPET DRYING

If the carpet or the pad (insulator) is wet, use the following criteria for drying or for replacing the components:

- For a 1-piece carpet assembly bonded to a cotton or a fiber padding, replace the entire assembly.
- For a 2-piece carpet assembly with a cotton or a fiber padding, replace the padding only. While the carpet is out of the vehicle, dry the carpet using the method described below.
- For a 1-piece carpet assembly bonded to a foam padding or attached to a synthetic

padding, dry the carpet using the method described below.

- For a 2-piece carpet assembly with a synthetic padding, dry the assembly using the method described below.

Drying Method

1. If you observe puddles of liquid on the carpet face, use a wet vacuum to remove the excess moisture.
2. Blot the face of the carpet with a towel in order to absorb as much moisture as possible.
3. Point a fan at the affected area and air dry the carpet.

CARPET REPLACEMENT - FRONT

Removal Procedure

1. Remove the seat. Refer to **POWER SEAT** .

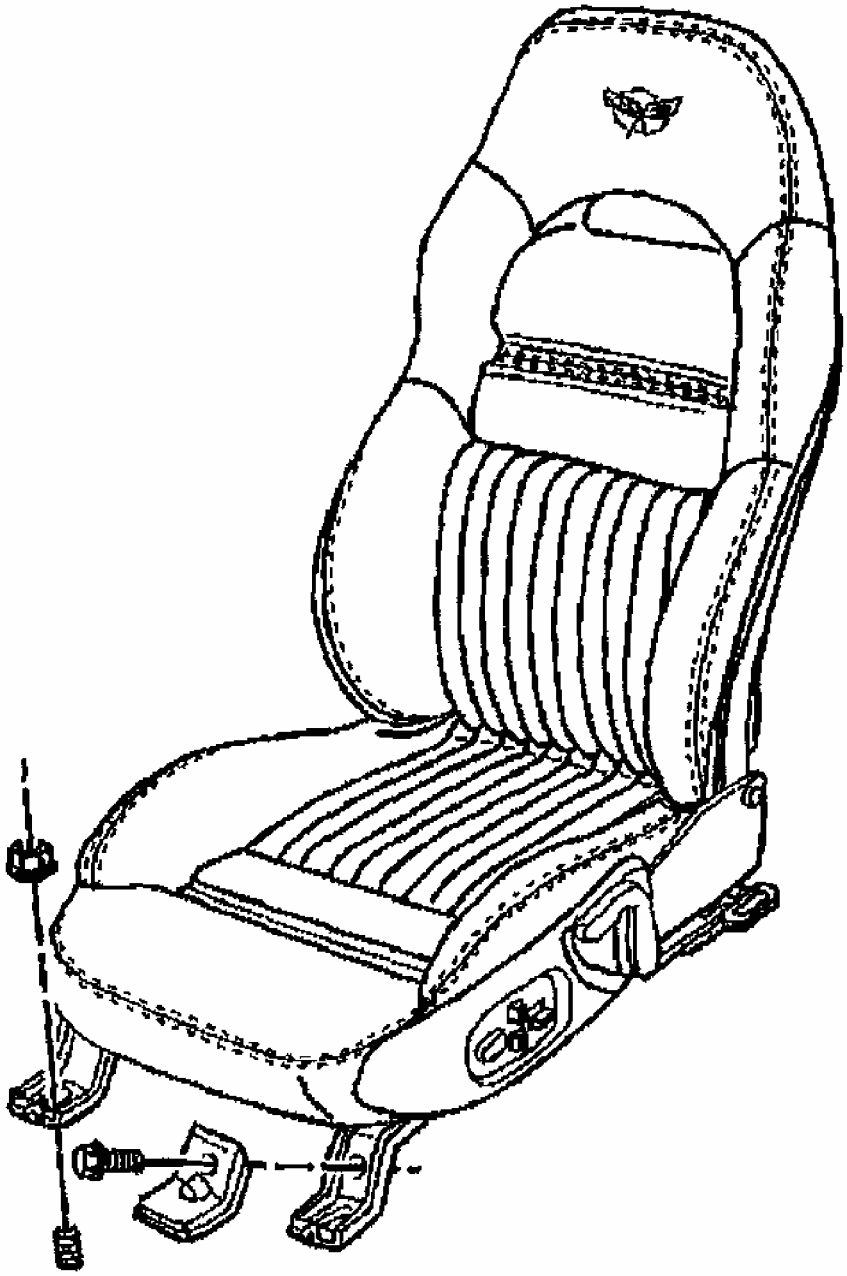

Fig. 24: Removing Seat Mounting Bolts
Courtesy of GENERAL MOTORS CORP.

2. Remove the door sill trim plate. Refer to **Door Sill Plate Replacement** .

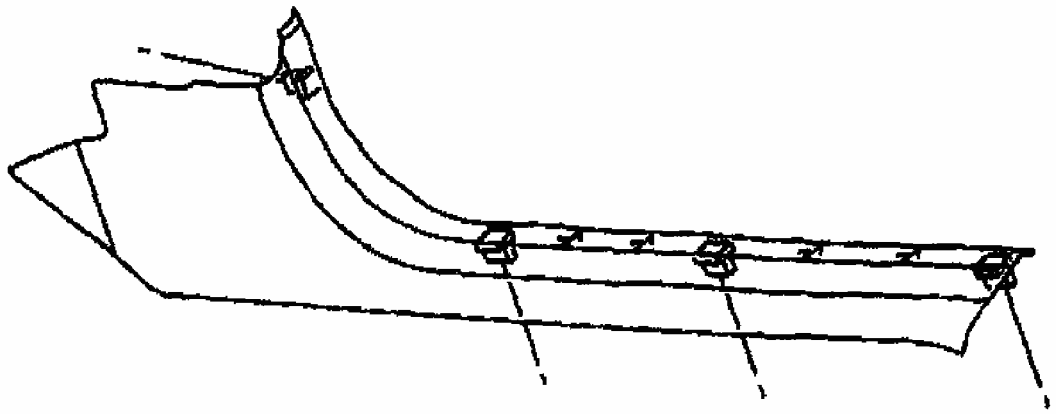

G01734348

Fig. 25: Removing Door Sill Trim Plate
Courtesy of GENERAL MOTORS CORP.

3. Remove the accelerator pedal stop bracket (drivers side only).

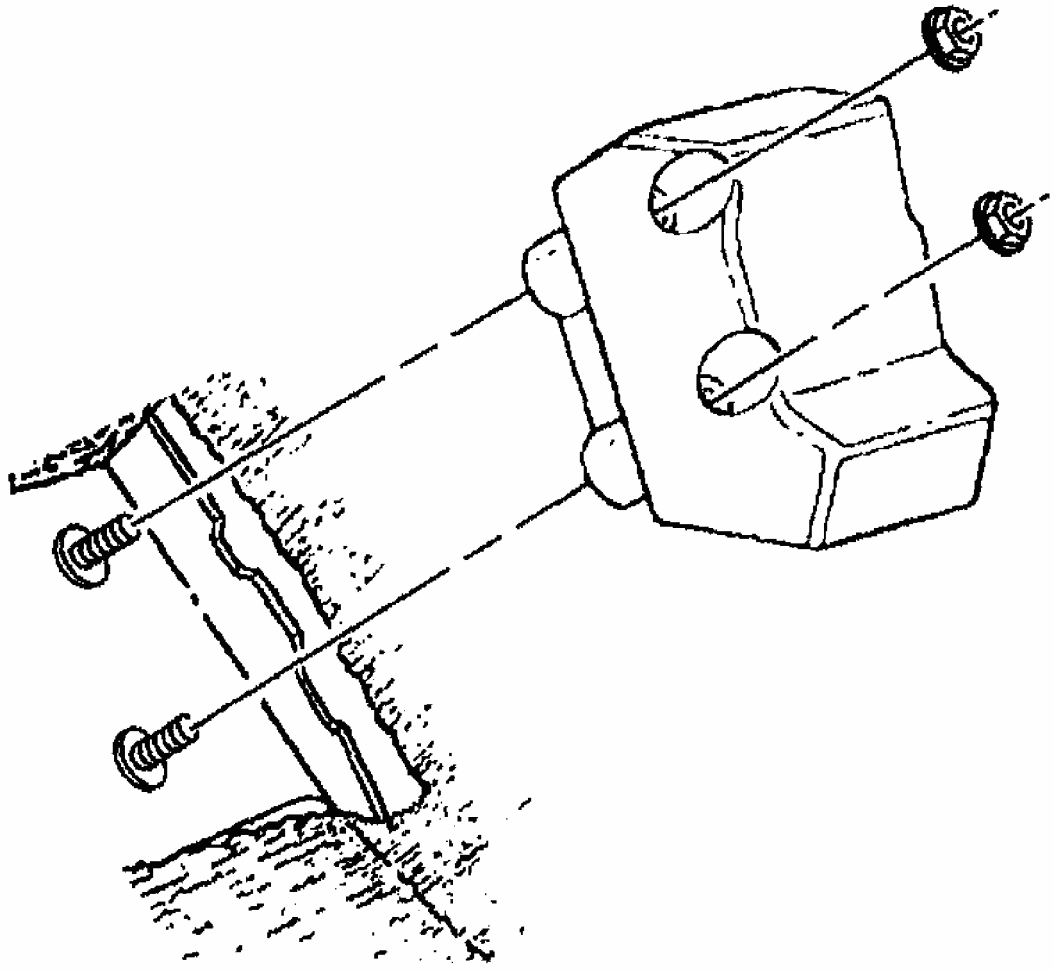

Fig. 26: Removing Accelerator Pedal Stop Bracket Nuts
Courtesy of GENERAL MOTORS CORP.

4. Remove the drivers foot rest, (drivers side only).

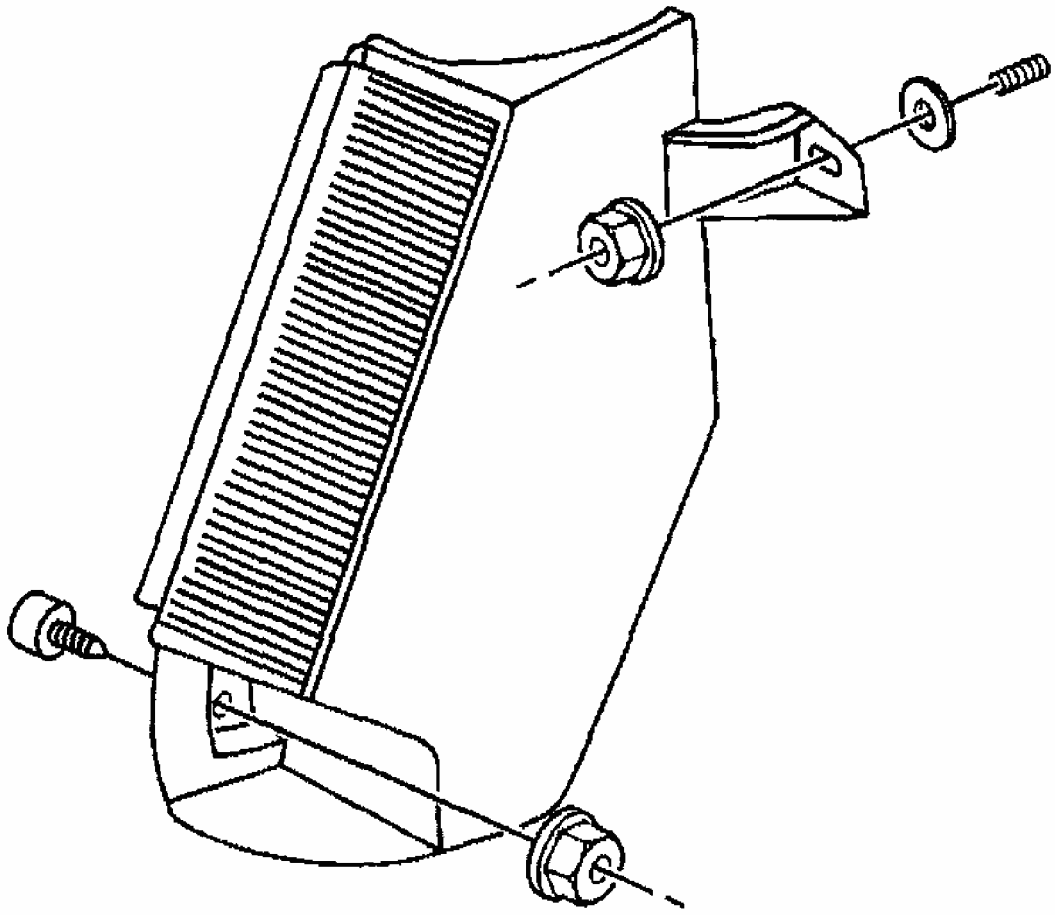

G01734350

Fig. 27: Removing Drivers Footrest Nuts
Courtesy of GENERAL MOTORS CORP.

5. Remove the floor kick-up panel (passenger side only). Refer to **Kick-Up Panel Replacement - Front Floor** .

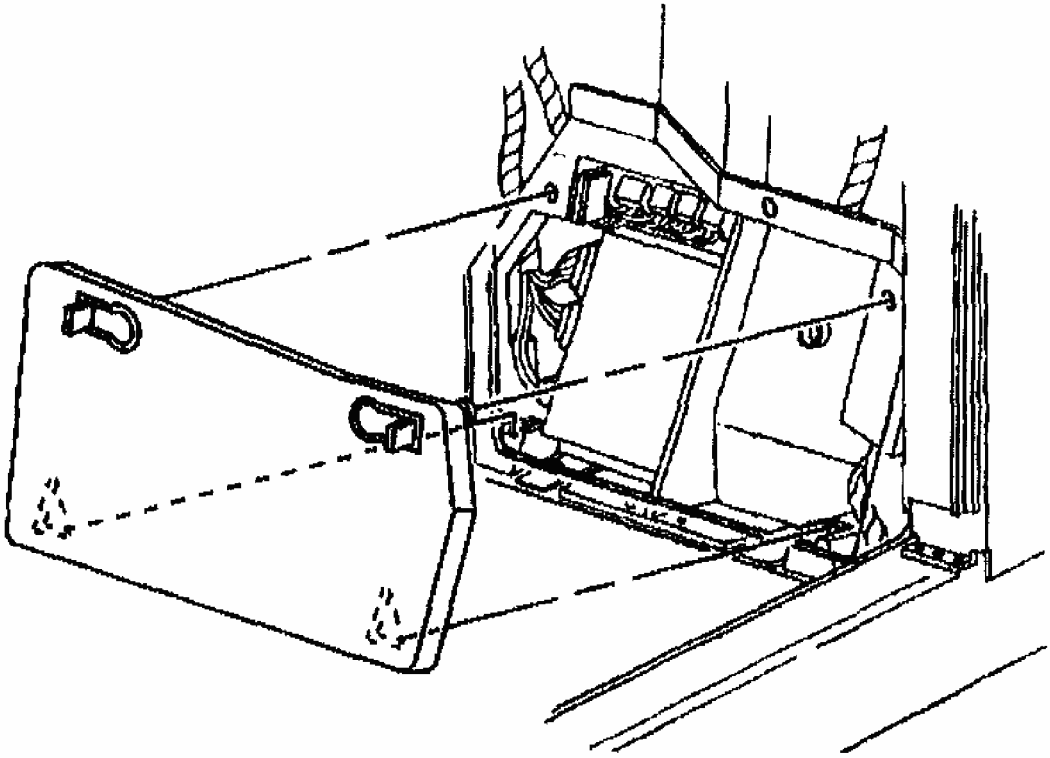

Fig. 28: Removing Kick-Up Panel
Courtesy of GENERAL MOTORS CORP.

6. Pull the carpet back and disconnect the air duct (passenger side only).
7. Pull the intermediate carpet from under lock pillar trim and reposition up out of the way.
8. Pull the carpet from under the instrument panel and accessory trim plate.
9. Pull the seat electrical connector down through the carpet (if equipped).
10. Remove the carpet.
11. Remove the carpet air outlet, if necessary, by turning the air outlet counterclockwise.

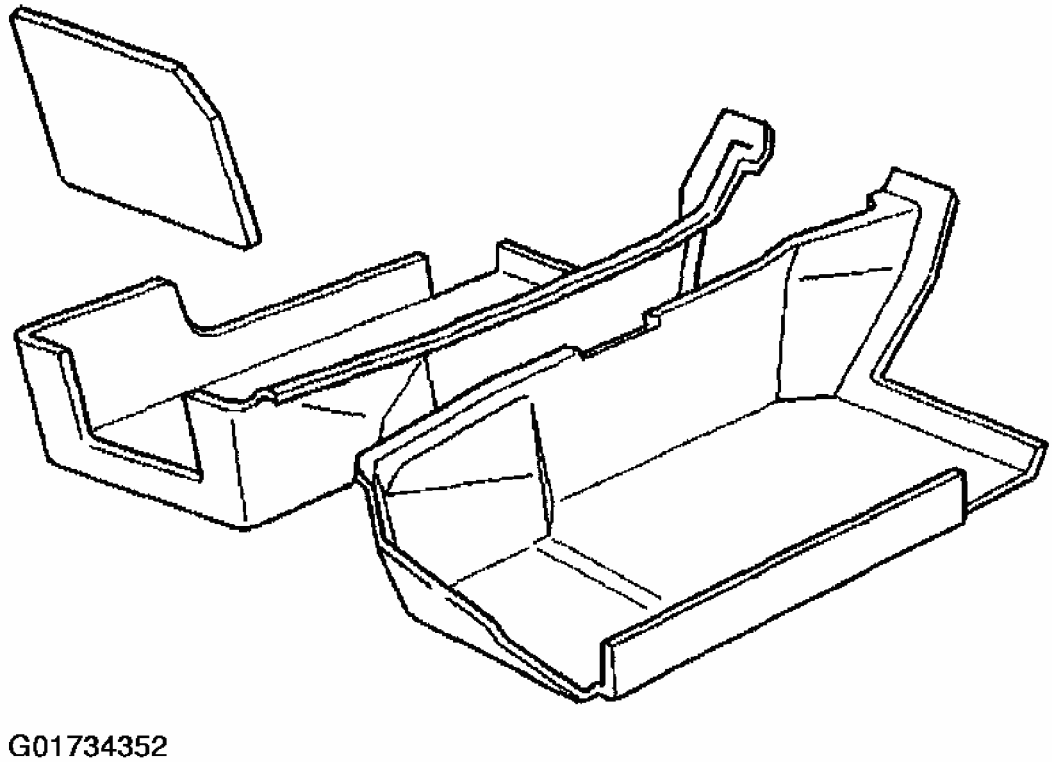

Fig. 29: Identifying Front Carpet
Courtesy of GENERAL MOTORS CORP.

Installation Procedure

1. Position the carpet over the floor.
2. Install the carpet air outlet into the carpet (passenger side only).
   - **2.1.** Rotate the air outlet 45 degrees counterclockwise and insert the outlet into the front of the carpet.
   - **2.2.** Rotate the air outlet 45 degrees clockwise to lock in position.
3. Connect the air duct to the carpet air outlet (passenger side only).
4. Tuck the carpet under the accelerator pedal (drivers side only).

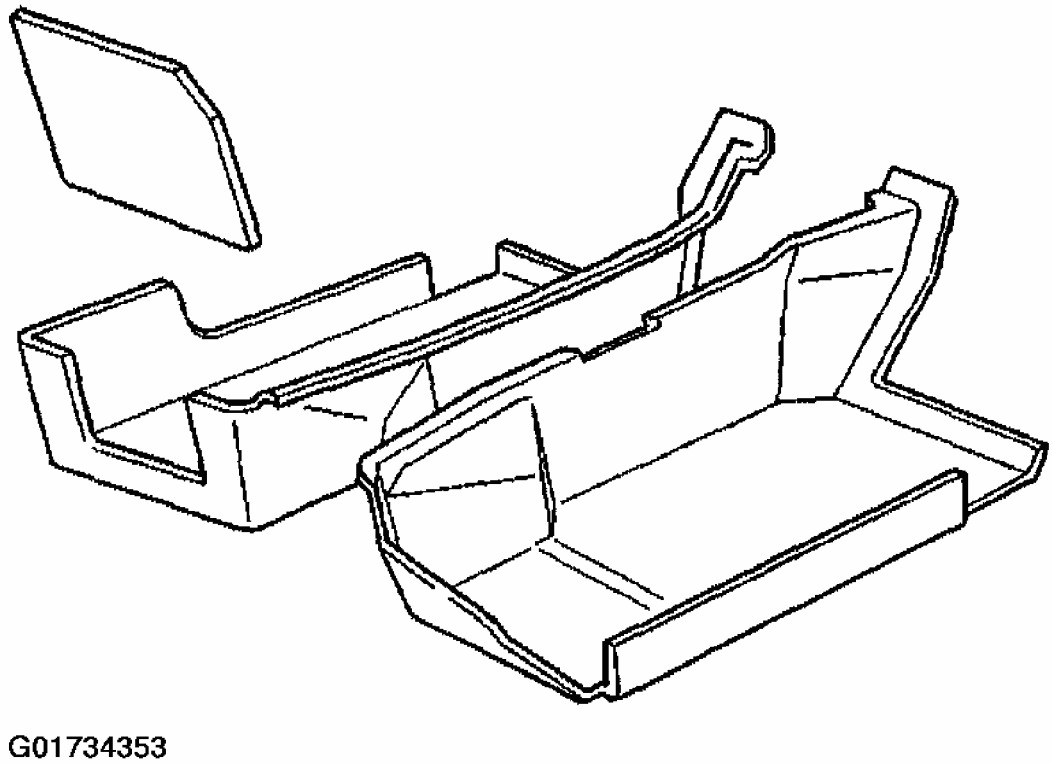

Fig. 30: Identifying Front Carpet
Courtesy of GENERAL MOTORS CORP.

CAUTION: Refer to FASTENER NOTICE .

5. Install the accelerator pedal stop, (drivers side only).

Tighten

Tighten the accelerator pedal stop nuts to 10 N.m (89 lb in).

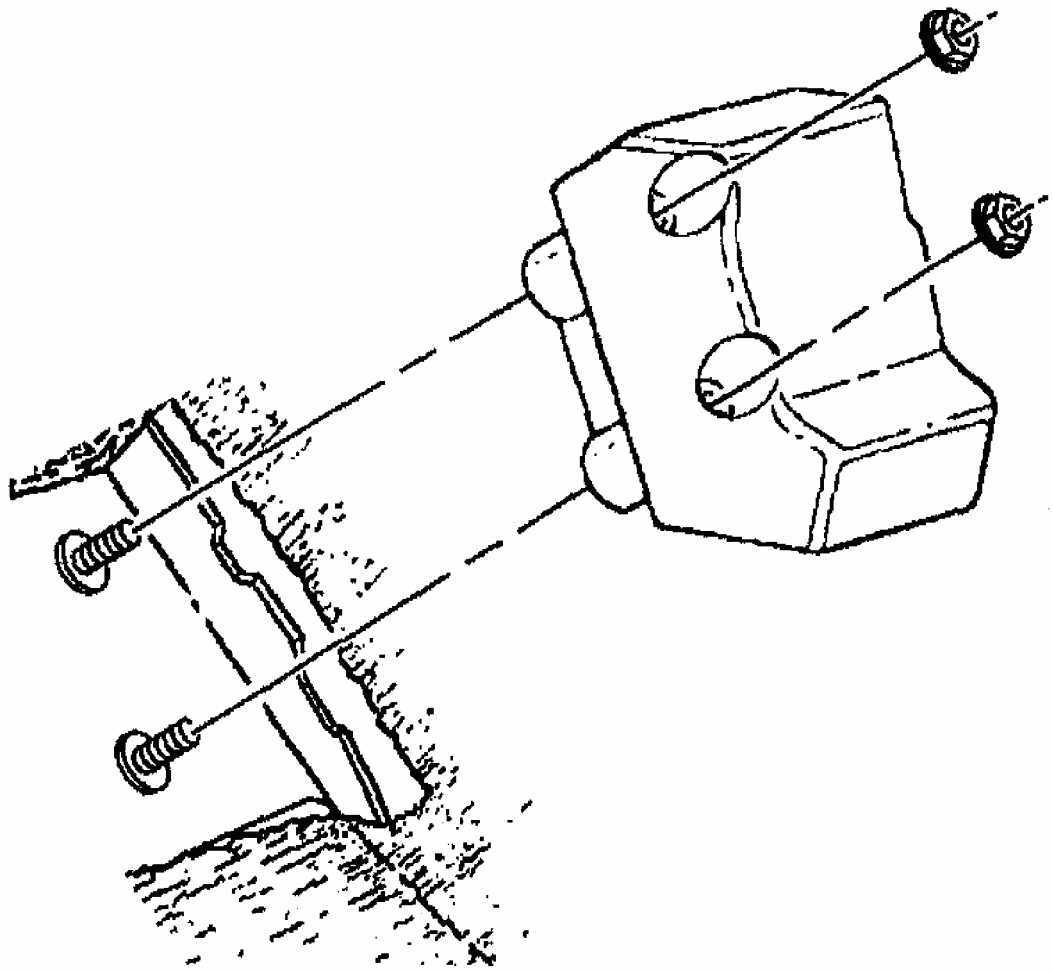

Fig. 31: Installing Accelerator Pedal Stop Bracket Nuts
Courtesy of GENERAL MOTORS CORP.

6. Install the drivers foot rest, (drivers side only).

Tighten

Tighten the foot rest nuts to 10 N.m (89 lb in).

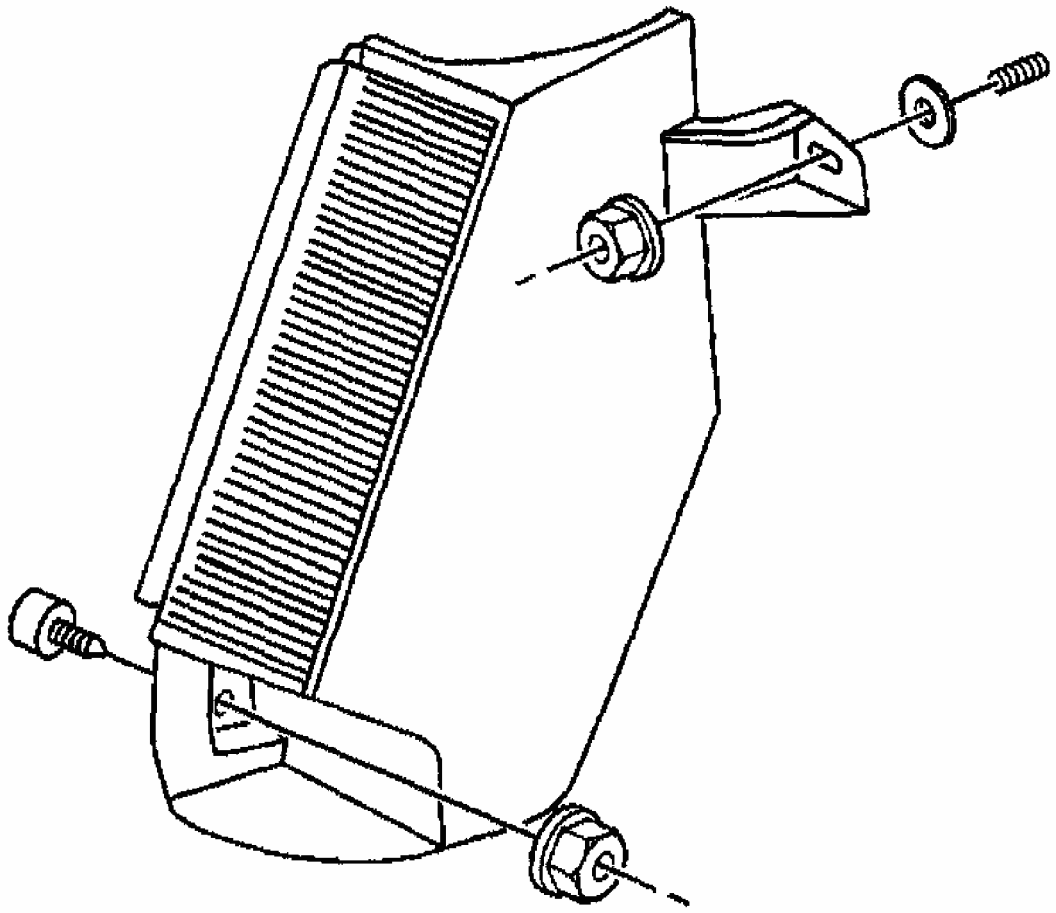

Fig. 32: Installing Drivers Foot Rest Nuts
Courtesy of GENERAL MOTORS CORP.

7. Tuck the carpet under the instrument panel and accessory trim plate.
8. Pull the seat electrical connector through the slit in the carpet.

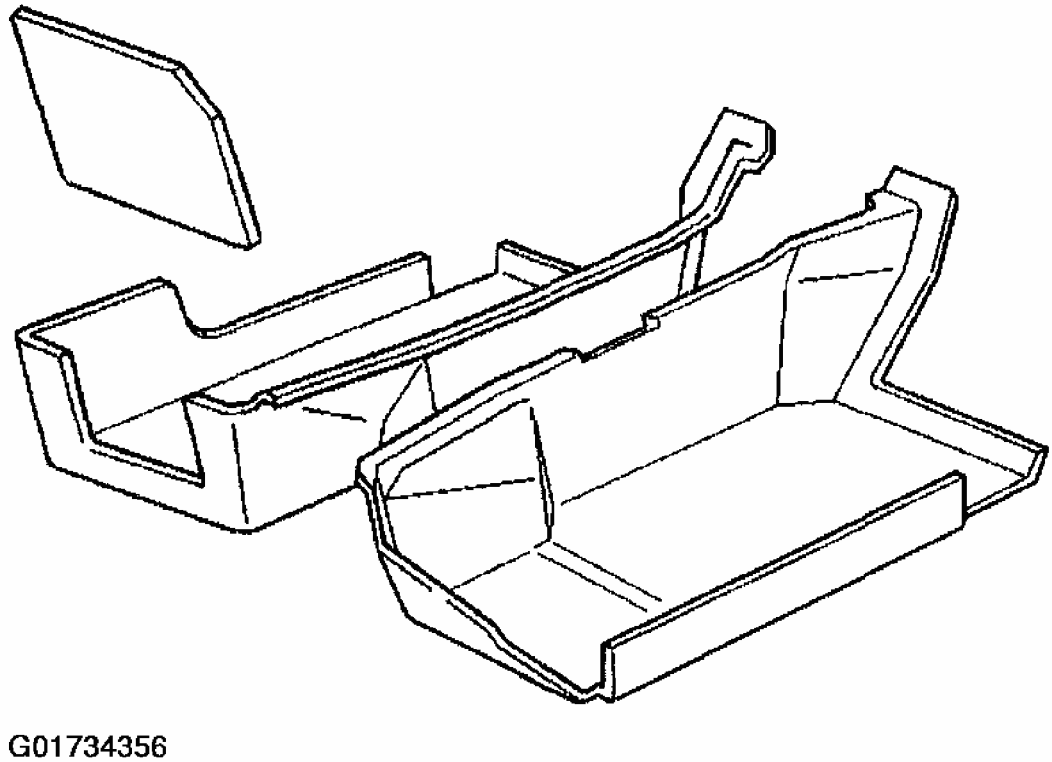

Fig. 33: Identifying Front Carpet
Courtesy of GENERAL MOTORS CORP.

9. Install the floor kick-up panel (passenger side only). Refer to **Kick-Up Panel Replacement - Front Floor**

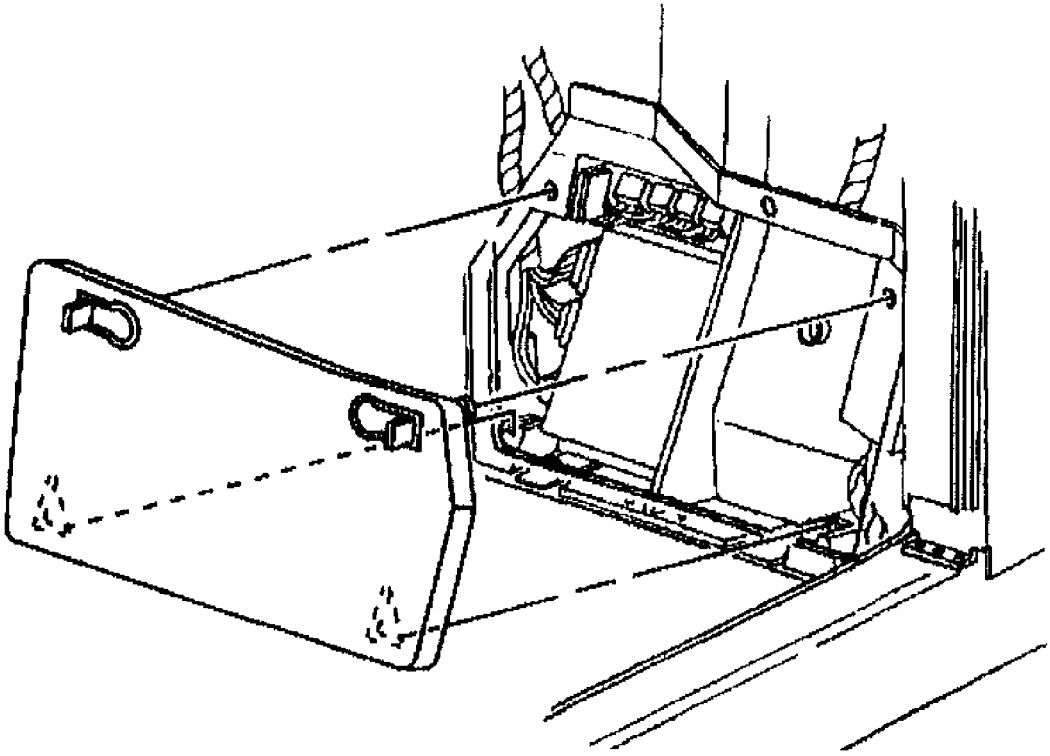

Fig. 34: Installing Kick-Up Panel
Courtesy of GENERAL MOTORS CORP.

10. Install the side sill trim plate. Refer to **Door Sill Plate Replacement** .
11. Reposition the intermediate carpet over the floor carpet.

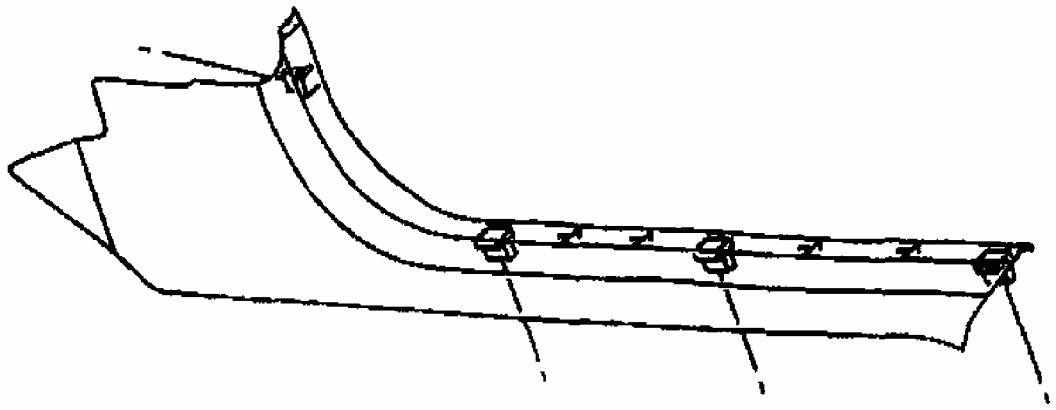

G01734358

Fig. 35: Installing Door Sill Trim Plate
Courtesy of GENERAL MOTORS CORP.

12. Install the seat. Refer to **POWER SEAT** .

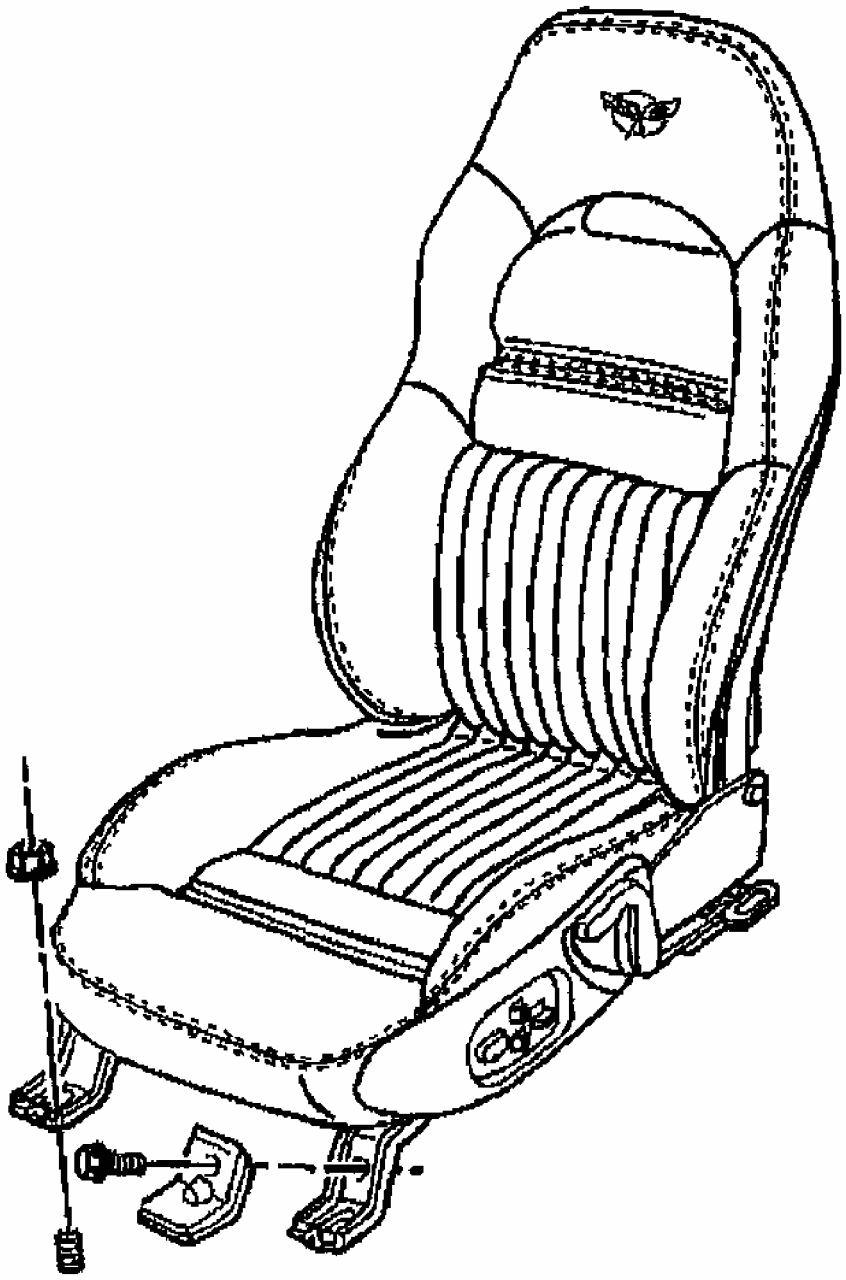

Fig. 36: Installing Seat Mounting Bolts
Courtesy of GENERAL MOTORS CORP.

CARPET REPLACEMENT - INTERMEDIATE (COUPE, HARDTOP)

Removal Procedure

The intermediate carpet is shaped and form fitted to the rear intermediate body panel and tucked under the adjoining trim panels and over the floor carpet.

1. Slide the seats forward.
2. Pull the carpet from under the adjoining trim panels.
3. Remove the intermediate carpet.

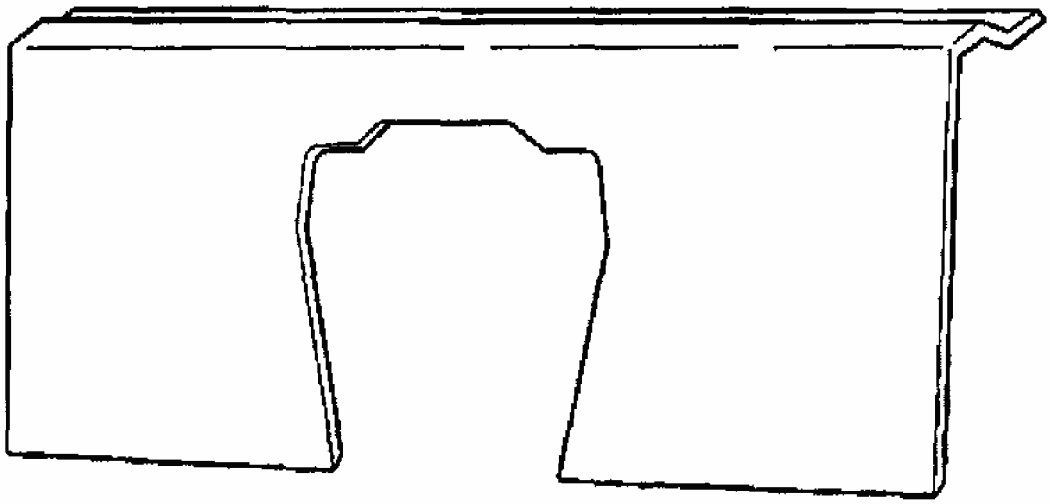

Fig. 37: Identifying Intermediate Carpet
Courtesy of GENERAL MOTORS CORP.

Installation Procedure

1. Position the carpet to the intermediate body panel.
2. Tuck the carpet under the adjoining panels and over the floor carpet.

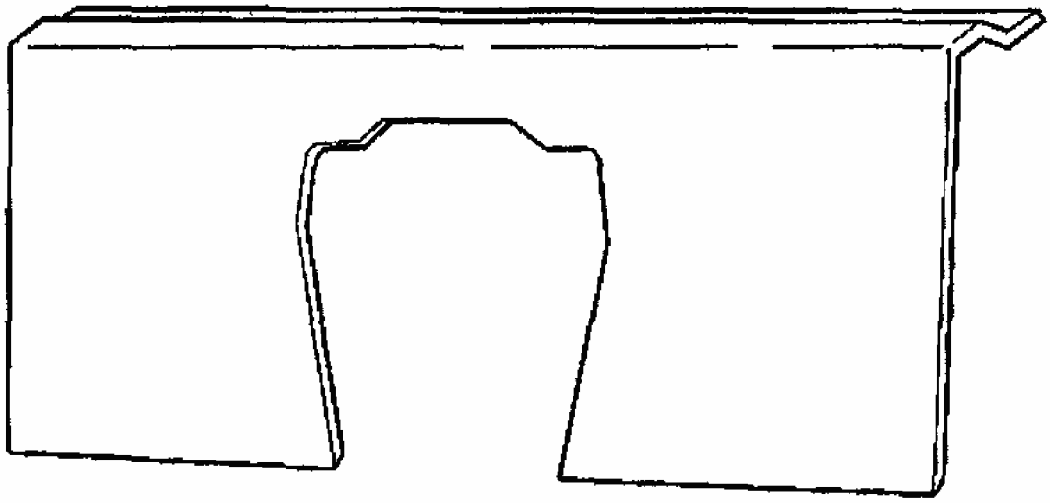

G01734361

Fig. 38: Identifying Intermediate Carpet
Courtesy of GENERAL MOTORS CORP.

CARPET REPLACEMENT - INTERMEDIATE (CONVERTIBLE)

Removal Procedure

1. Slide the seats forward.
2. Open the folding top stowage lid.

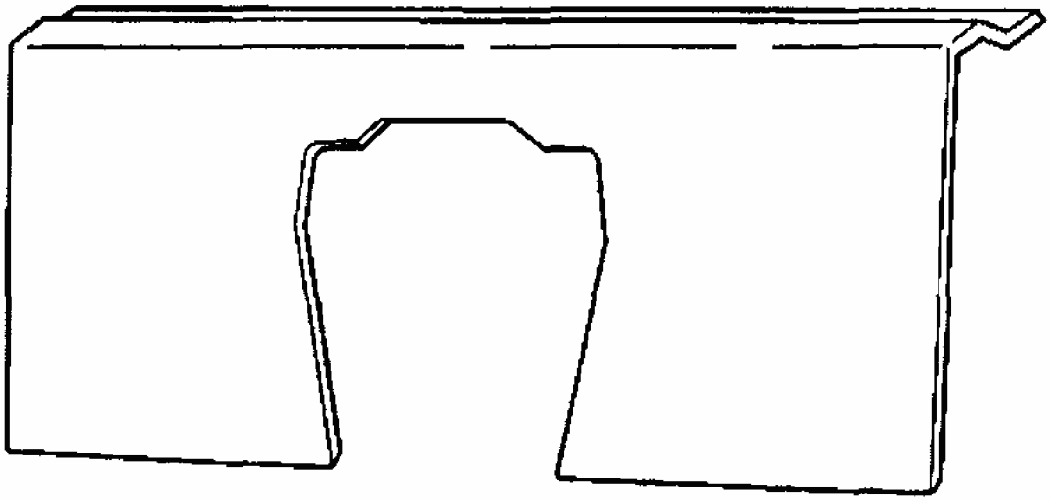

Fig. 39: Identifying Intermediate Carpet
Courtesy of GENERAL MOTORS CORP.

3. Remove the stowage lid extension panel. Refer to **Compartment Lid Extension - Folding Top Stowage** .
4. Remove the stowage lid extension panel bracket.
5. Pull the carpet from under the adjoining panels.
6. Remove the intermediate carpet.

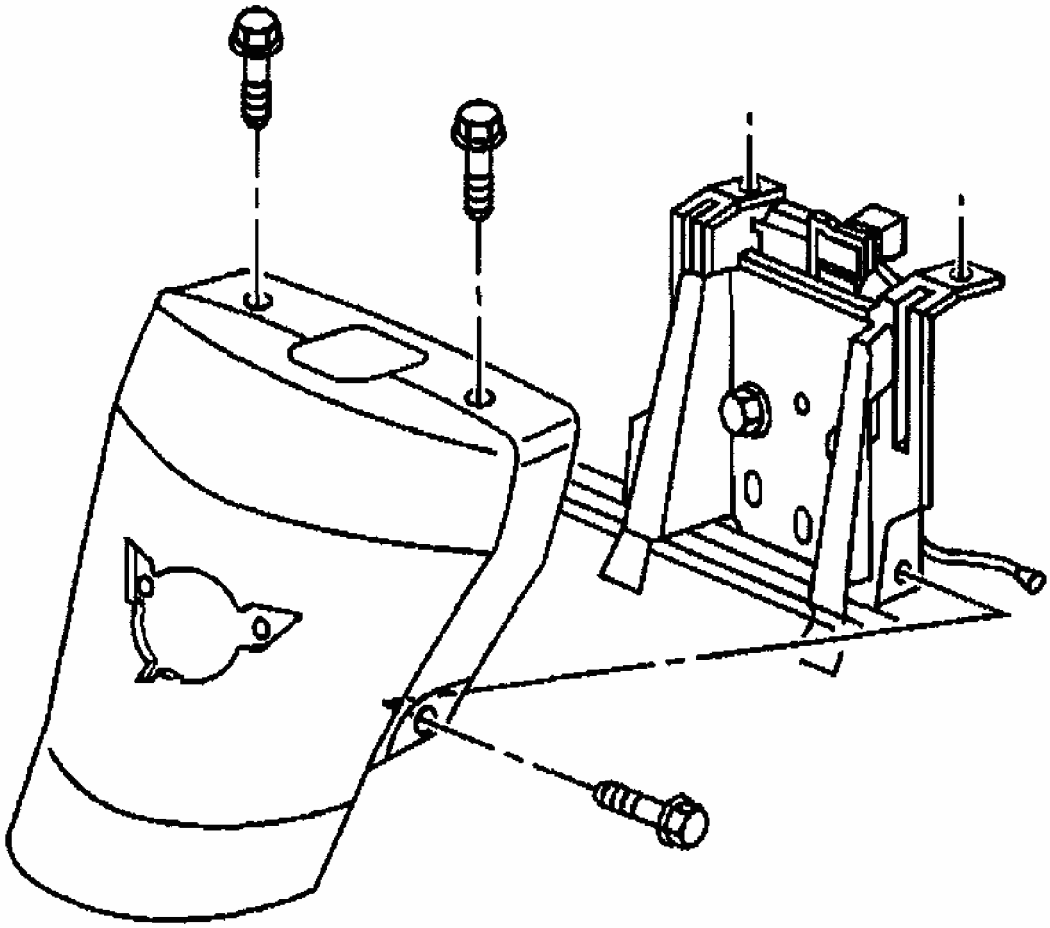

Fig. 40: Removing Stowage Lid Extension Panel Bolts
Courtesy of GENERAL MOTORS CORP.

Installation Procedure

1. Position the carpet to the intermediate body panel.
2. Tuck the carpet under the adjoining panels and over the floor carpet.

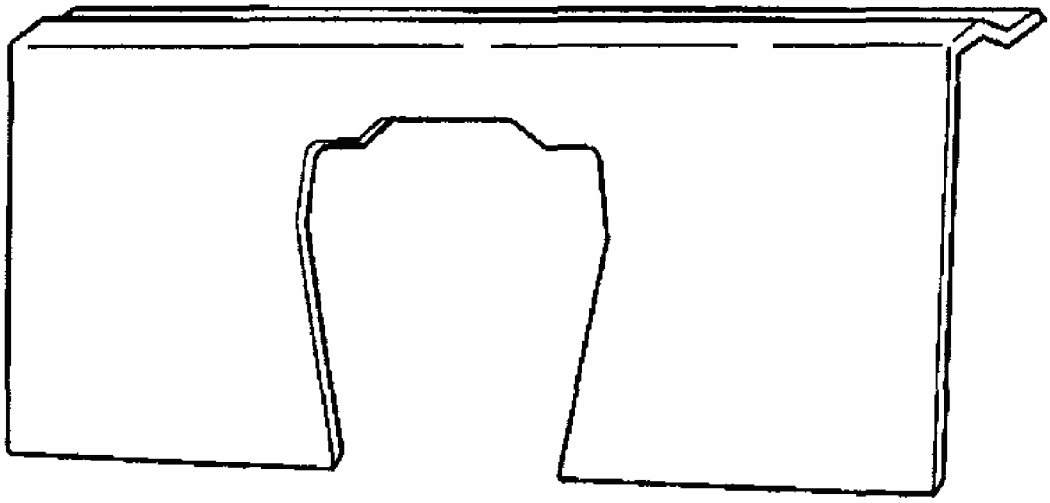

G01734364

Fig. 41: Identifying Intermediate Carpet
Courtesy of GENERAL MOTORS CORP.

3. Install the stowage lid bracket.
4. Install the stowage lid extension panel with the manual release cable extending out from under the extension panel. Refer to **Compartment Lid Extension - Folding Top Stowage** .
5. Close the stowage lid and check the operation of the latch.

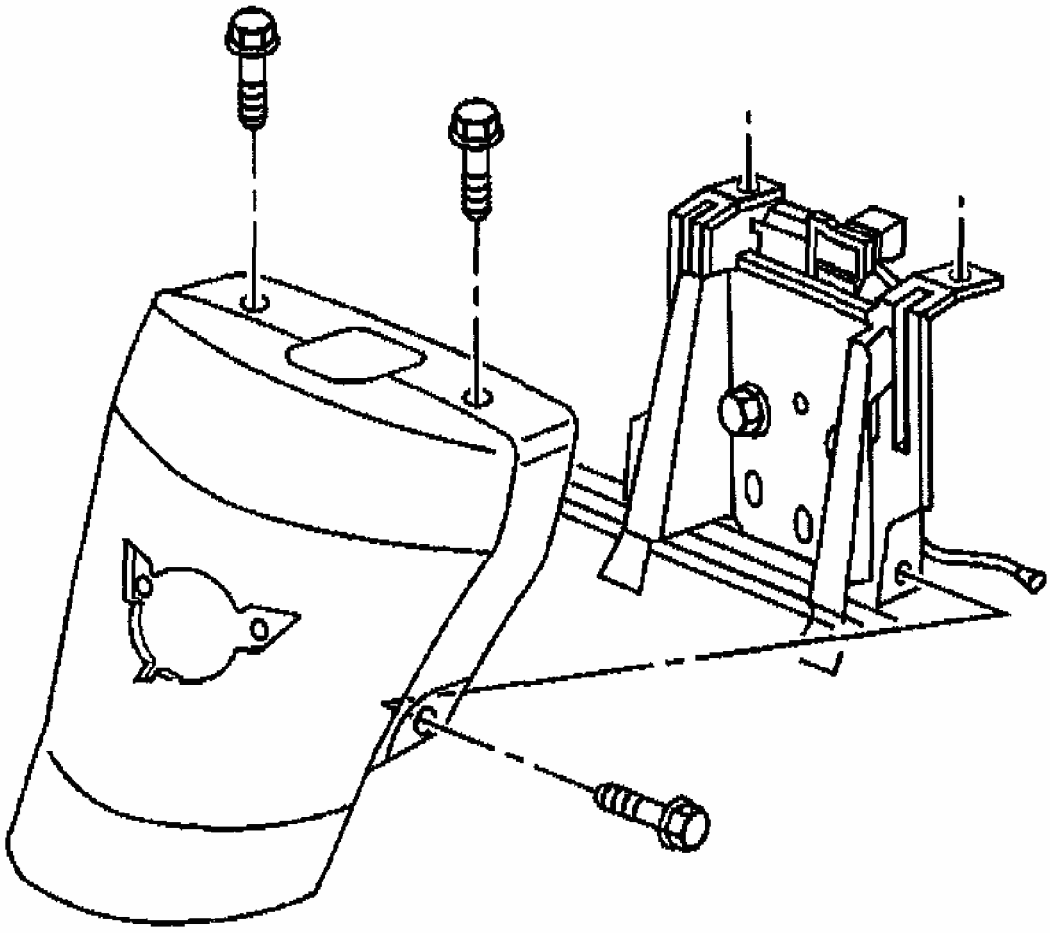

Fig. 42: Installing Stowage Lid Extension Panel Bolts
Courtesy of GENERAL MOTORS CORP.

CARPET REPLACEMENT - REAR COMPARTMENT FLOOR (CONVERTIBLE)

Removal Procedure

1. Position the folding top in an open (raised) position with the number one and number five bows up.

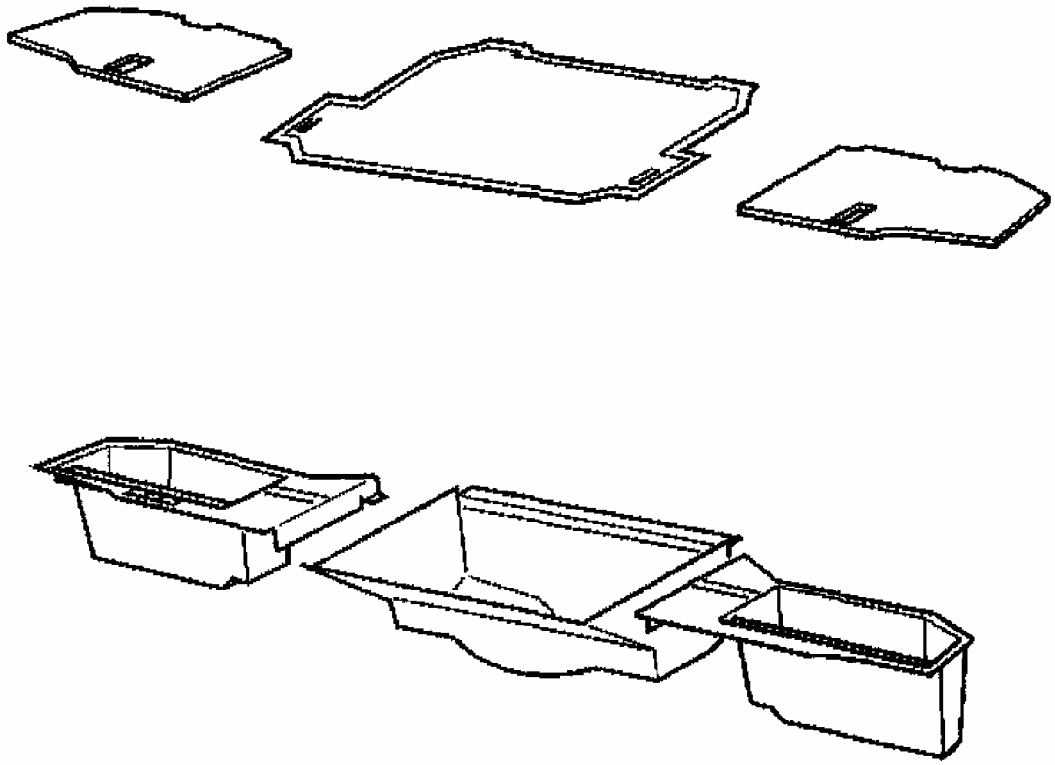

Fig. 43: Identifying Rear Stowage Compartment Covers
Courtesy of GENERAL MOTORS CORP.

2. Open the folding top stowage compartment lid.

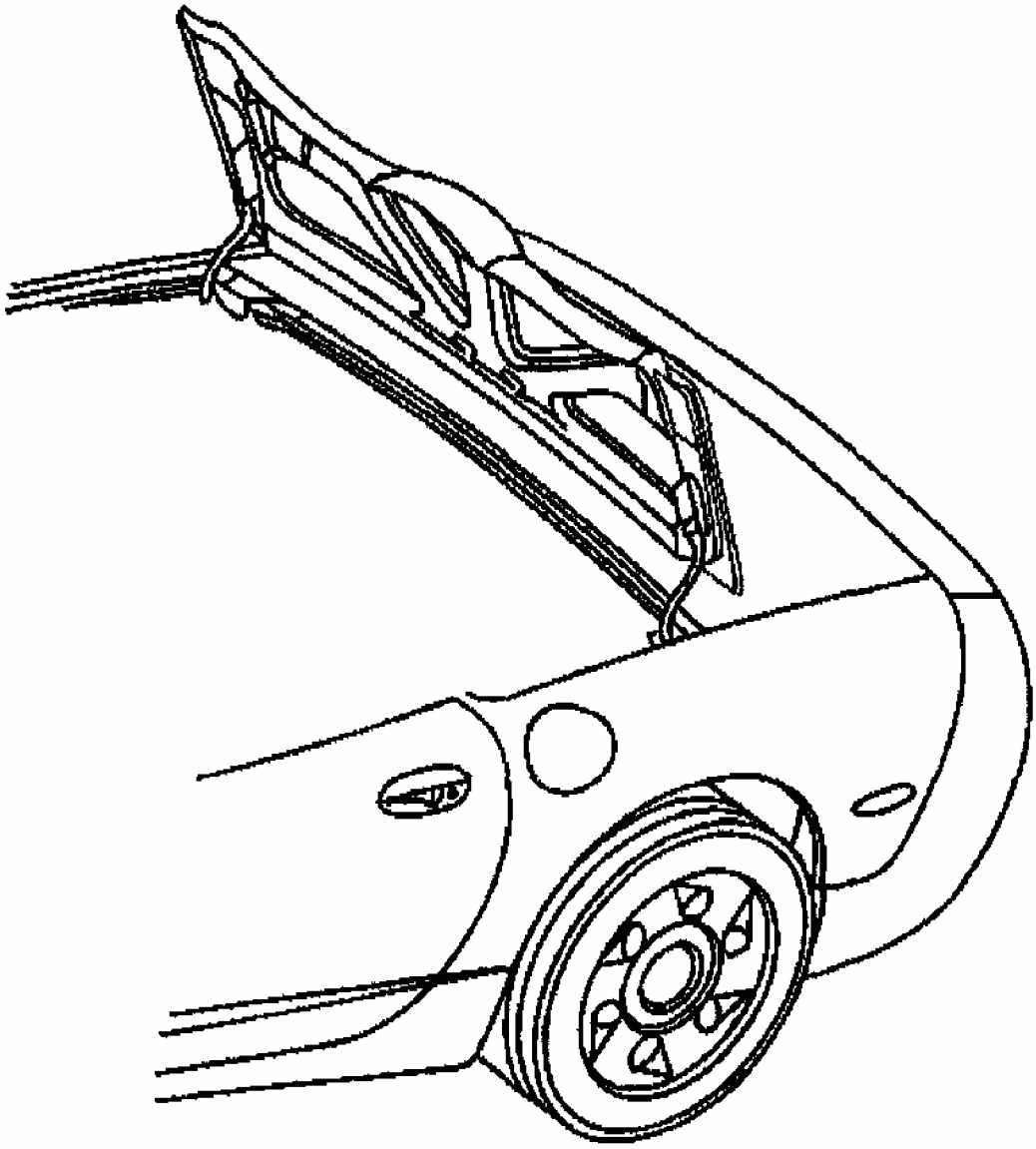

Fig. 44: Identifying Folding Top Stowage Compartment
Courtesy of GENERAL MOTORS CORP.

3. Remove the rear speaker covers.
4. Remove the rear side support trim covers.
5. Pull the carpet from behind the supports.
6. Close the folding top stowage lid.

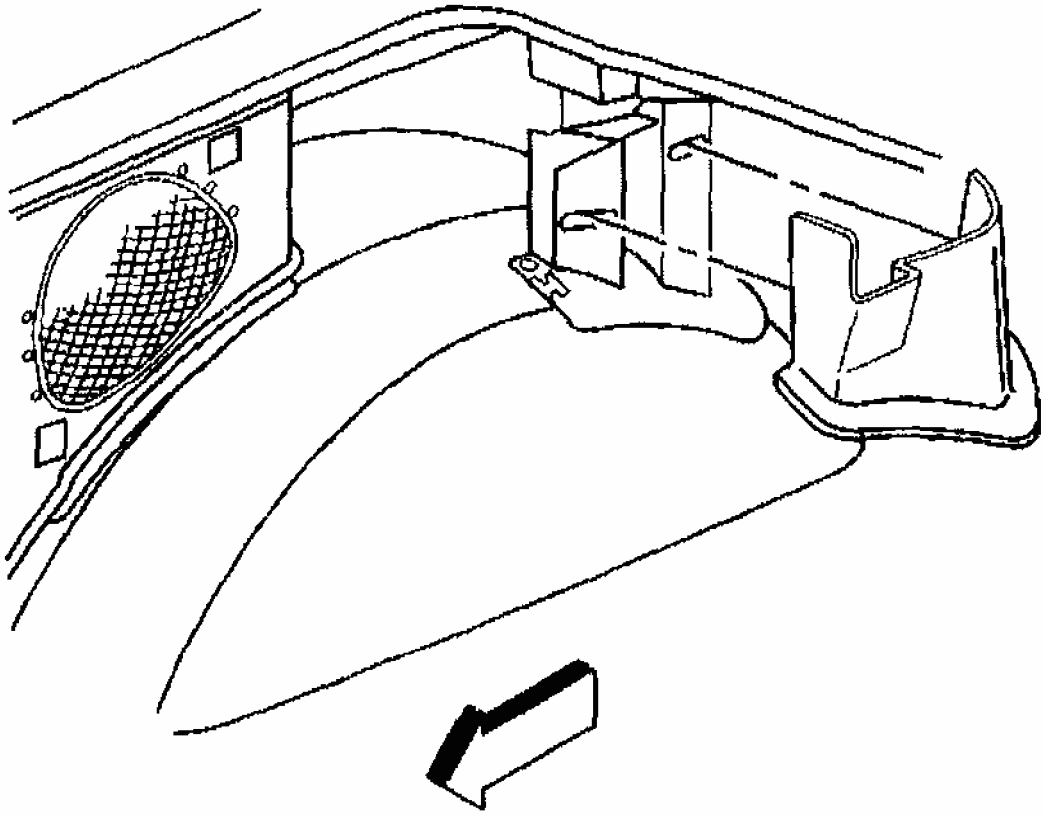

Fig. 45: Removing Rear Side Support Trim Covers
Courtesy of GENERAL MOTORS CORP.

Important: Do not attempt to open the folding top stowage lid and the rear compartment lid at the same time. The panels will contact in the open position

7. Open the rear compartment lid.

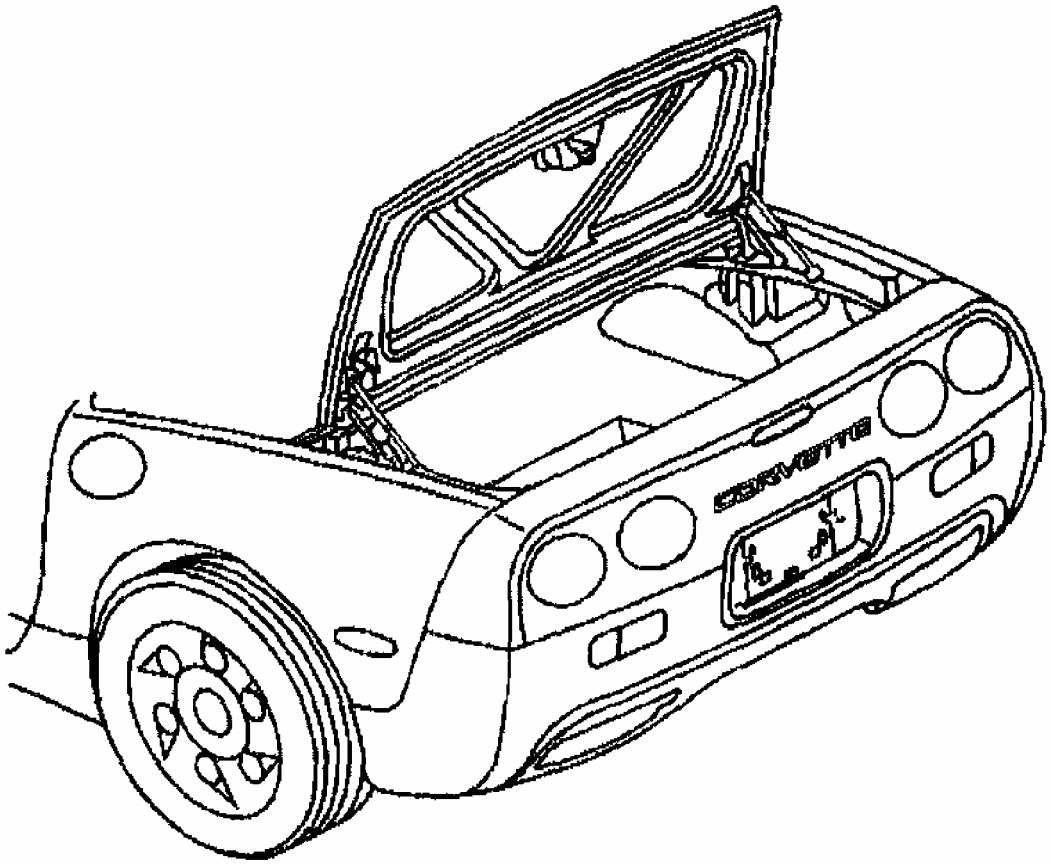

Fig. 46: Identifying Rear Compartment
Courtesy of GENERAL MOTORS CORP.

8. Remove the rear floor stowage compartment covers.
9. Remove the center rear floor stowage compartment cover latch striker retainers by sliding them toward the rear of the vehicle.

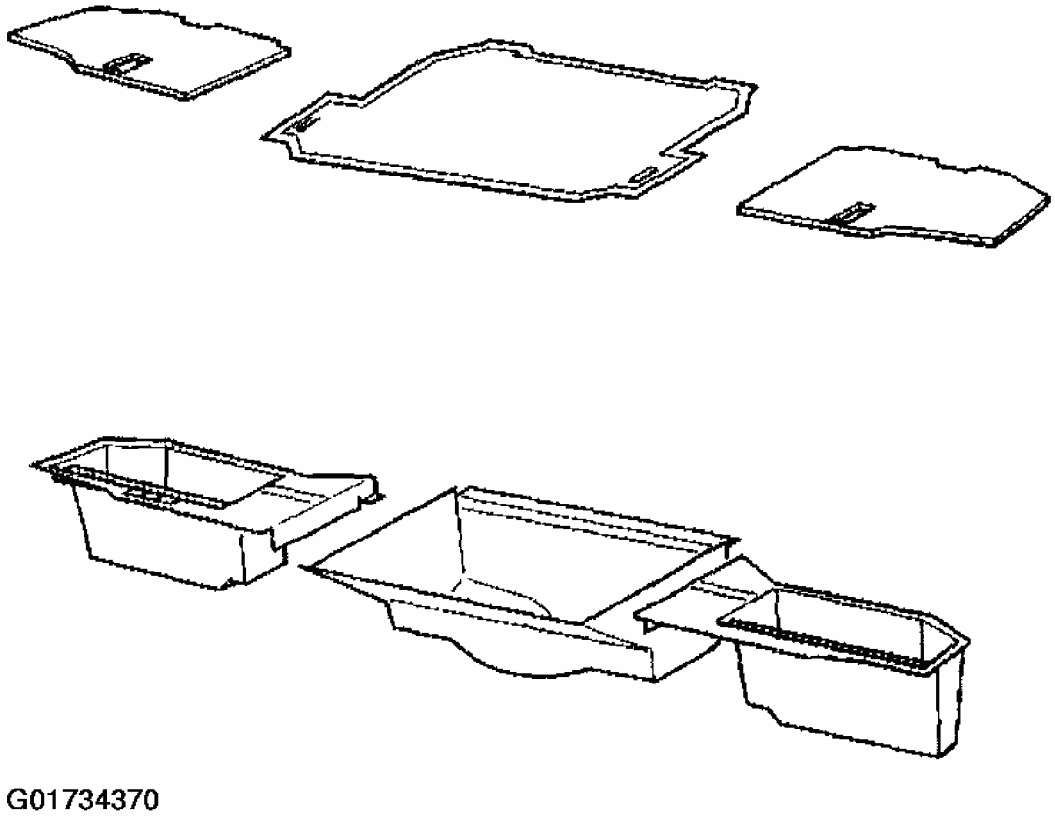

Fig. 47: Identifying Rear Stowage Compartment Covers
Courtesy of GENERAL MOTORS CORP.

10. Remove the rear/end corner carpet trim panels. Refer to **Trim Panel Carpet Replacement - Rear Corner (Coupe)** or **Trim Panel Carpet Replacement - Rear Corner (Convertible)** or **Trim Panel Carpet Replacement - Rear Corner (Hardtop)** .

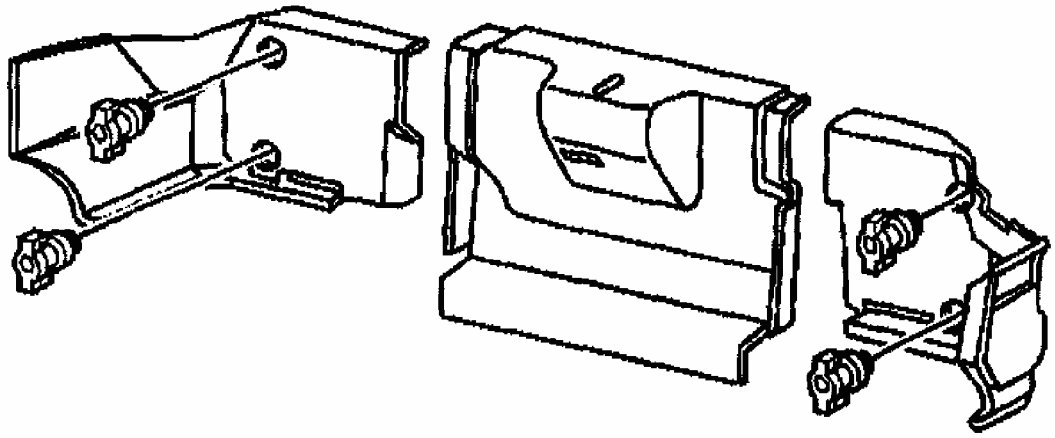

Fig. 48: Removing Cargo Net Attaching Nuts
Courtesy of GENERAL MOTORS CORP.

11. Remove the rear compartment carpet.

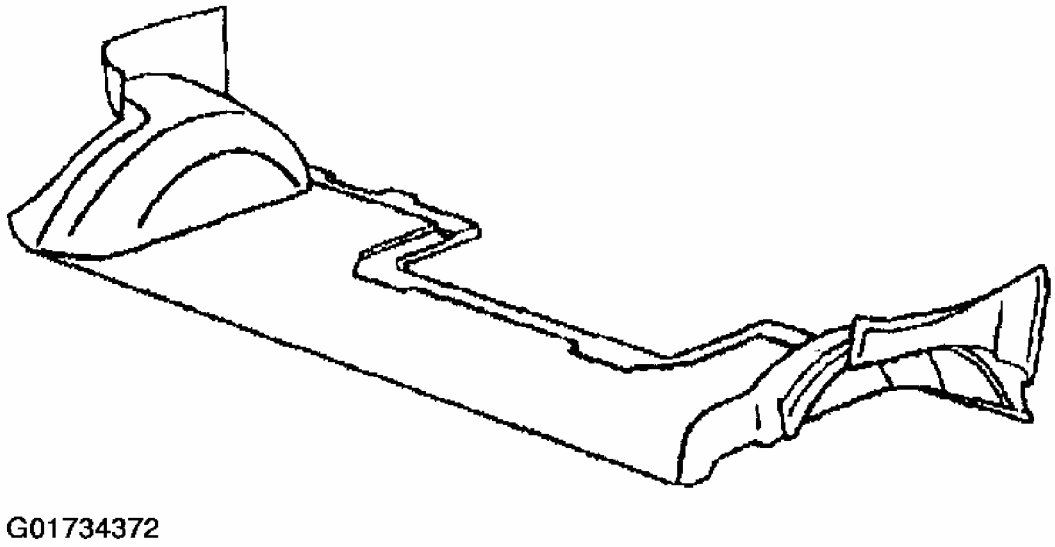

Fig. 49: Identifying Rear Compartment Carpet
Courtesy of GENERAL MOTORS CORP.

Installation Procedure

1. Position the carpet to the rear floor.

2. Install the center rear floor stowage compartment cover latch striker retainers.

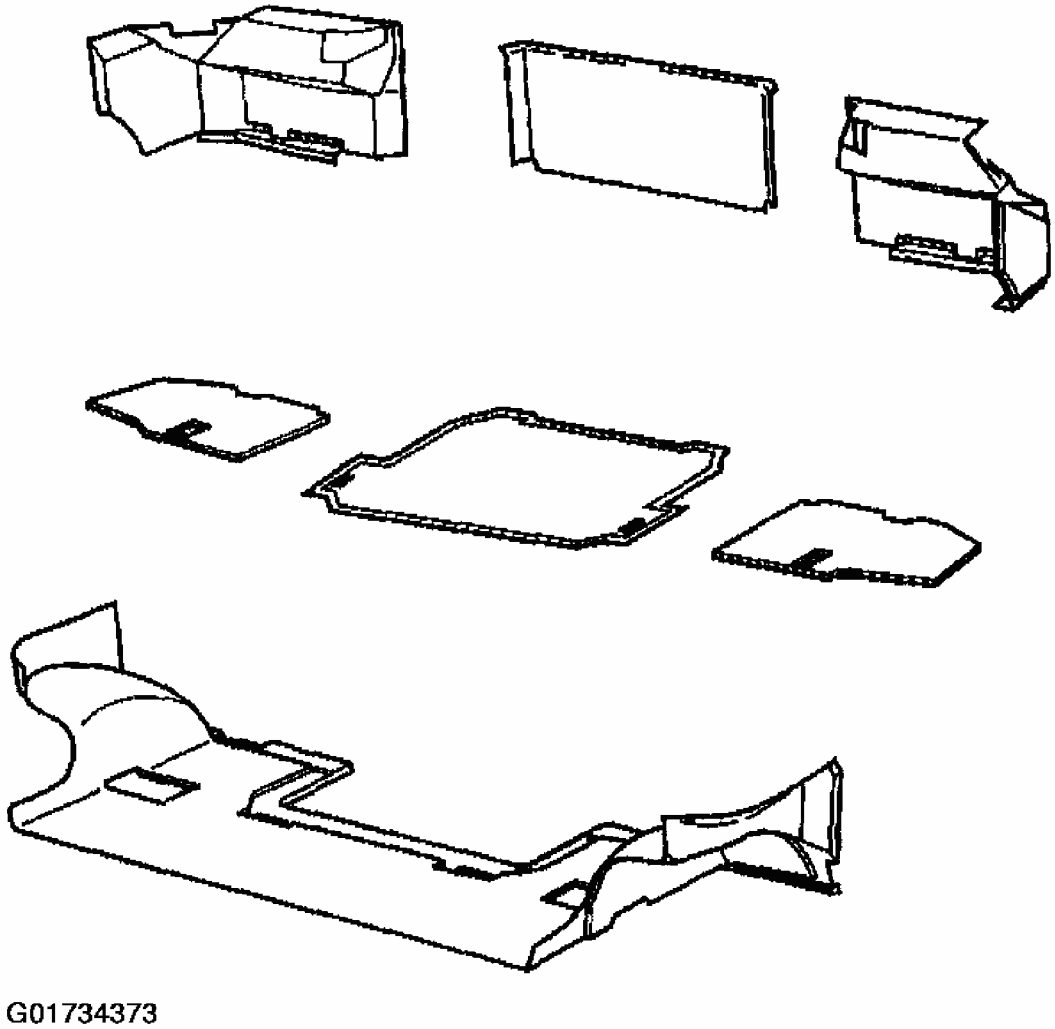

Fig. 50: Identifying Rear Stowage Compartment Covers
Courtesy of GENERAL MOTORS CORP.

3. Install the rear/end corner carpet trim panels. Refer to **Trim Panel Carpet Replacement - Rear Corner (Coupe)** or **Trim Panel Carpet Replacement - Rear Corner (Convertible)** or **Trim Panel Carpet Replacement - Rear Corner (Hardtop)** .

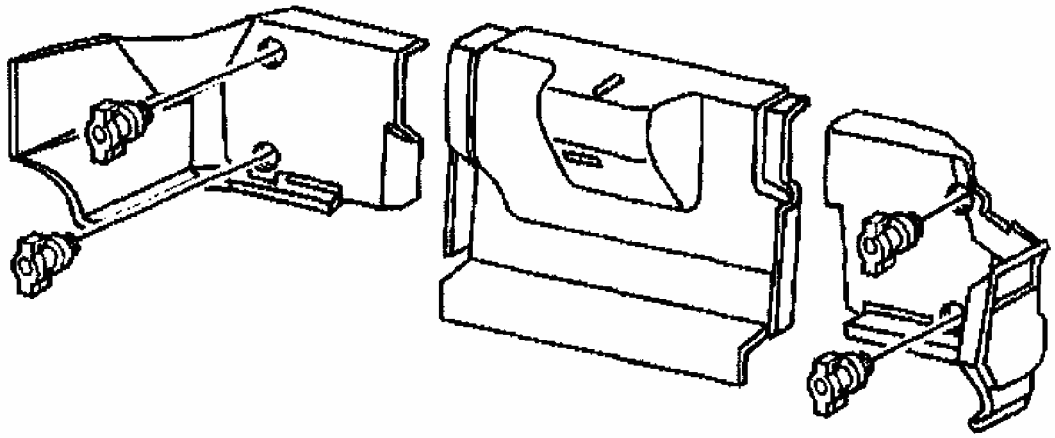

Fig. 51: Installing Cargo Net Attaching Nuts
Courtesy of GENERAL MOTORS CORP.

4. Install the stowage compartment covers.
5. Close the rear compartment lid.

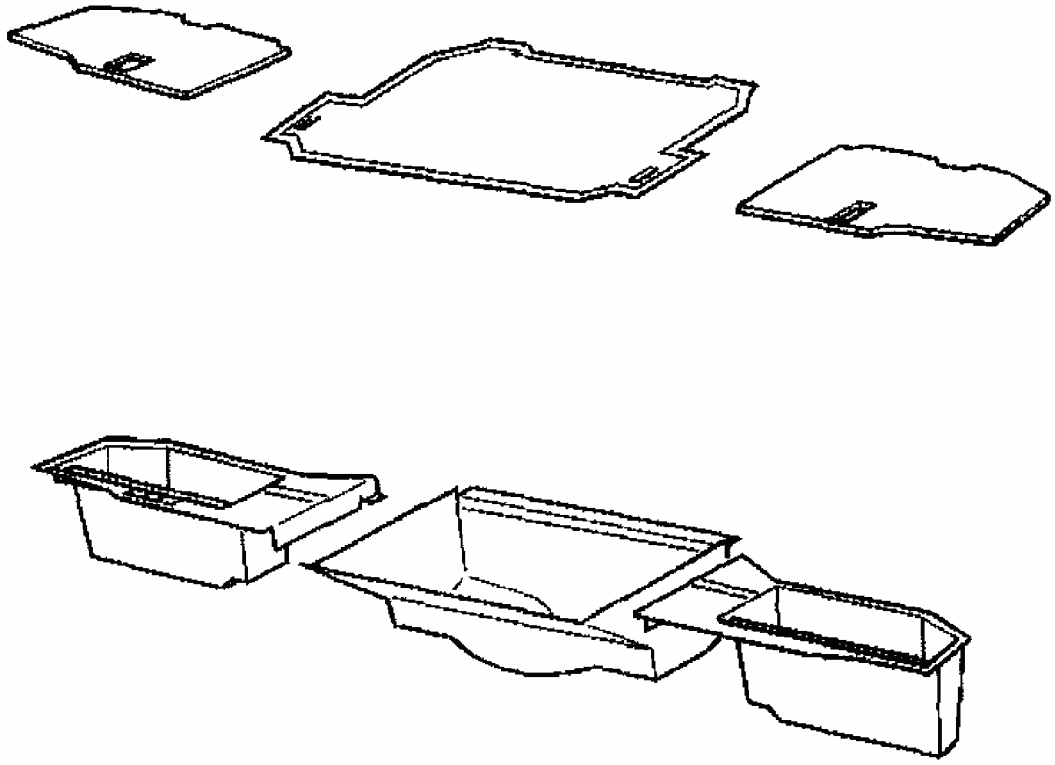

Fig. 52: Identifying Rear Stowage Compartment Covers
Courtesy of GENERAL MOTORS CORP.

Important: Do not attempt to open the folding top stowage lid and the rear compartment lid at the same time. The panels will contact in the open position.

6. Open the folding top stowage lid.

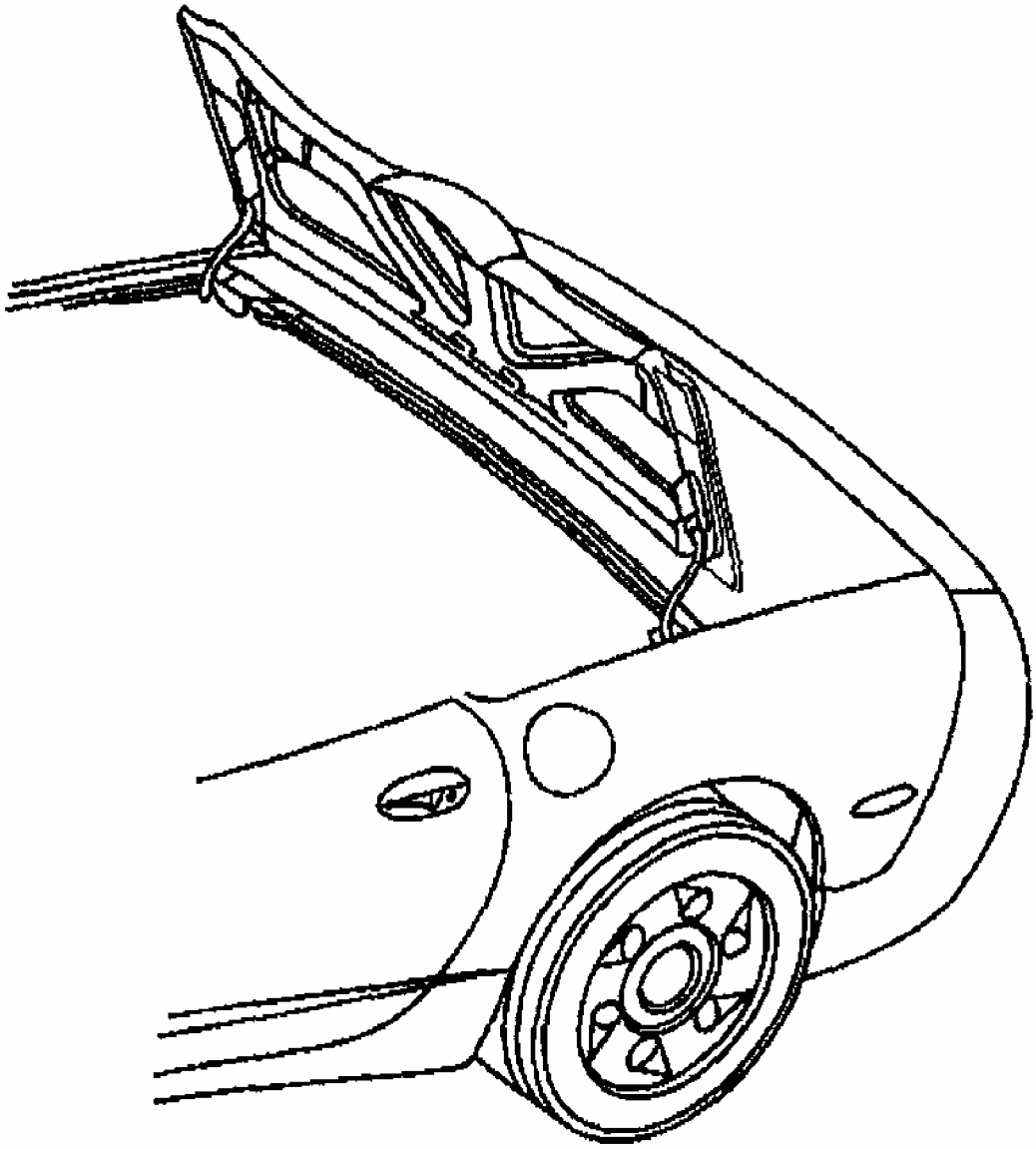

Fig. 53: Identifying Rear Compartment
Courtesy of GENERAL MOTORS CORP.

7. Tuck the carpet behind the supports.
8. Install the support trim panels.
9. Install the speaker covers.
10. Close the folding top stowage lid.

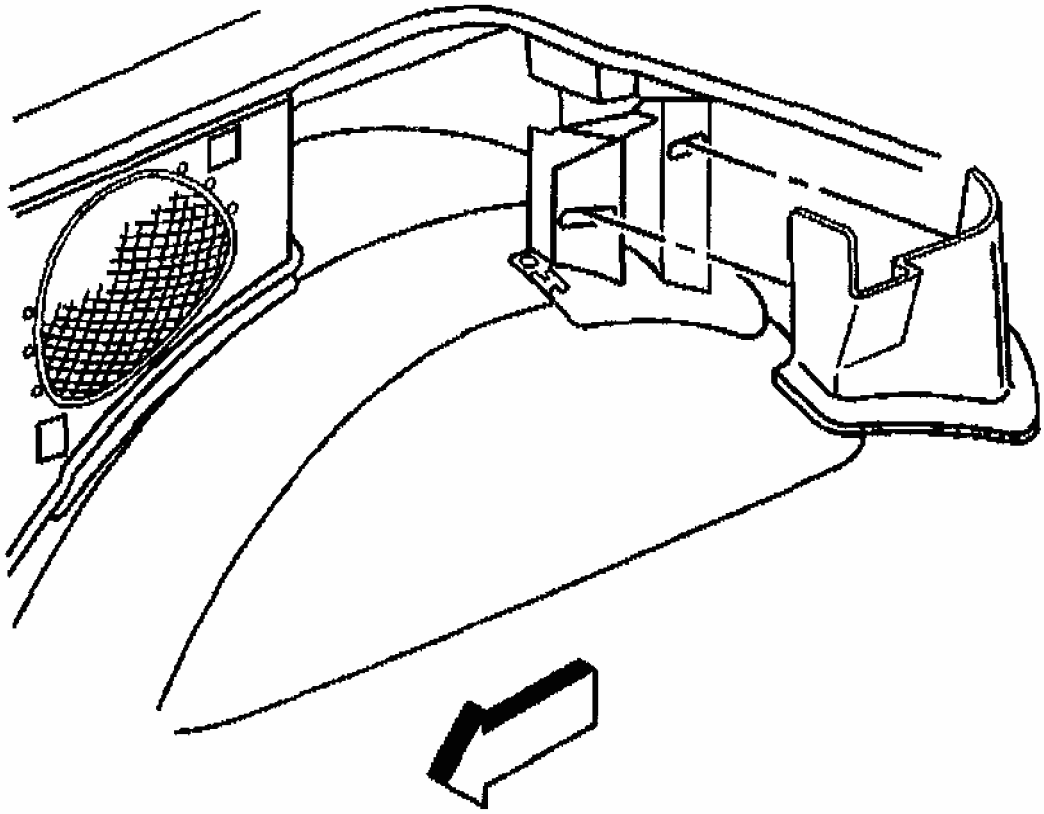

Fig. 54: Installing Rear Side Support Trim Covers
Courtesy of GENERAL MOTORS CORP.

CARPET REPLACEMENT - REAR COMPARTMENT FLOOR (COUPE)

Removal Procedure

1. Remove the right, left, and center rear floor stowage compartment covers.
2. Remove the center rear stowage compartment cover latch striker retainers by sliding them toward the rear of the vehicle.

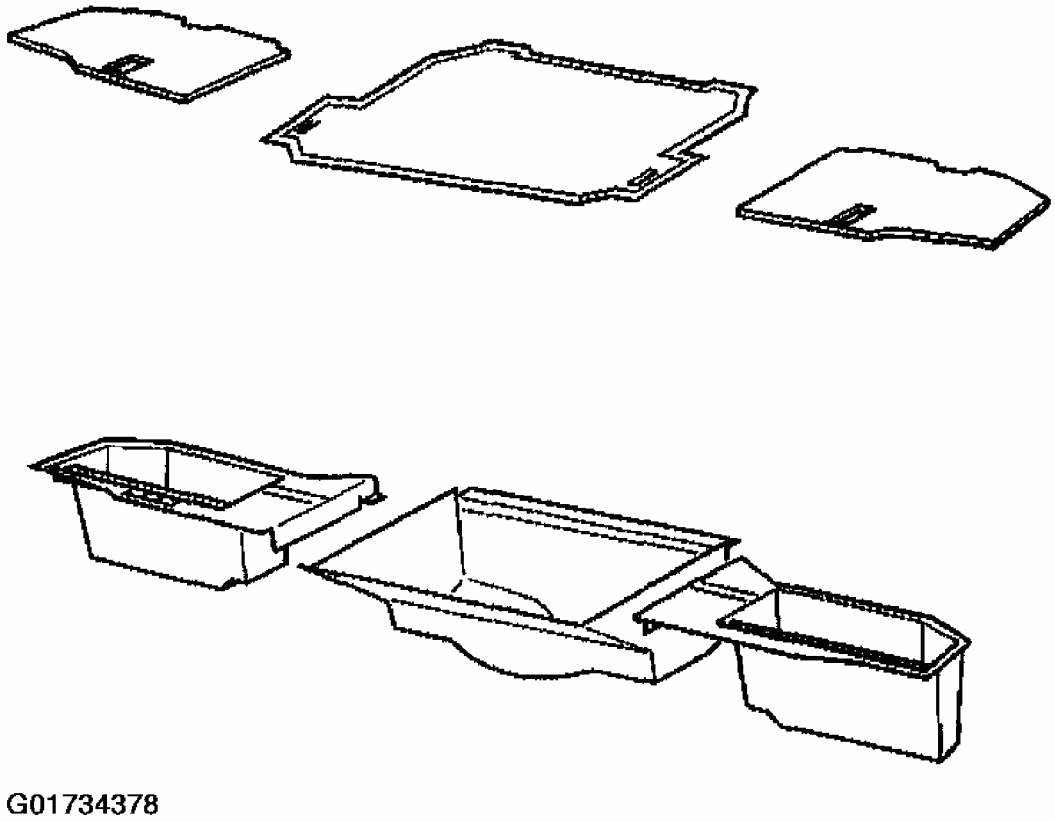

Fig. 55: Identifying Rear Stowage Compartment Covers
Courtesy of GENERAL MOTORS CORP.

3. Remove the roof lift off panel forward stowage brackets (if installed) by rotating them 90 degrees clockwise.
4. Remove the roof lift off panel forward stowage bracket carpet retainers by prying them up.

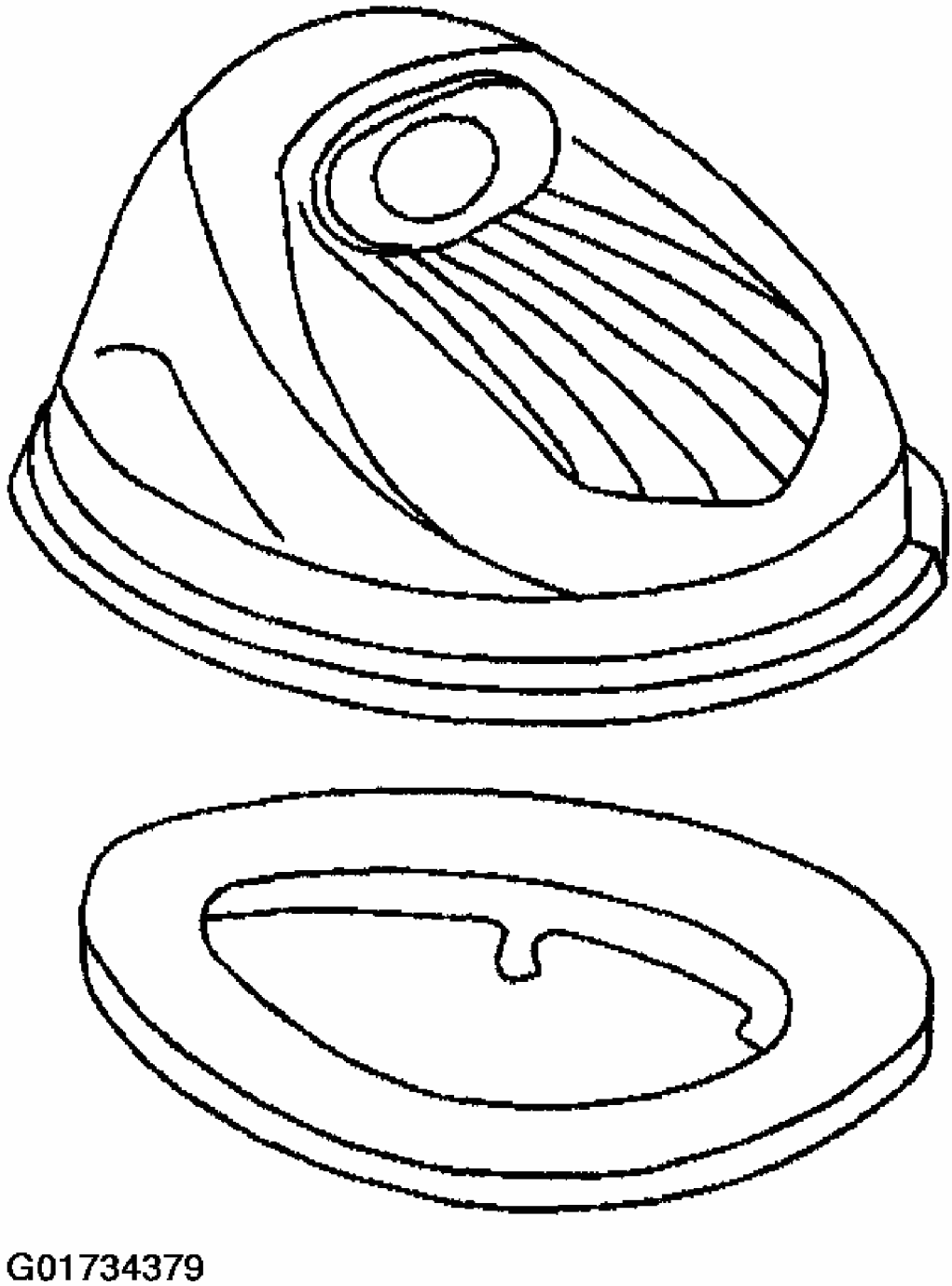

Fig. 56: Removing Roof Lift Off Panel Forward Stowage Brackets
Courtesy of GENERAL MOTORS CORP.

5. Pull the carpet from under the speaker grilles, and from under the rear/end corner carpet trim panels.

6. Remove the rear compartment carpet.

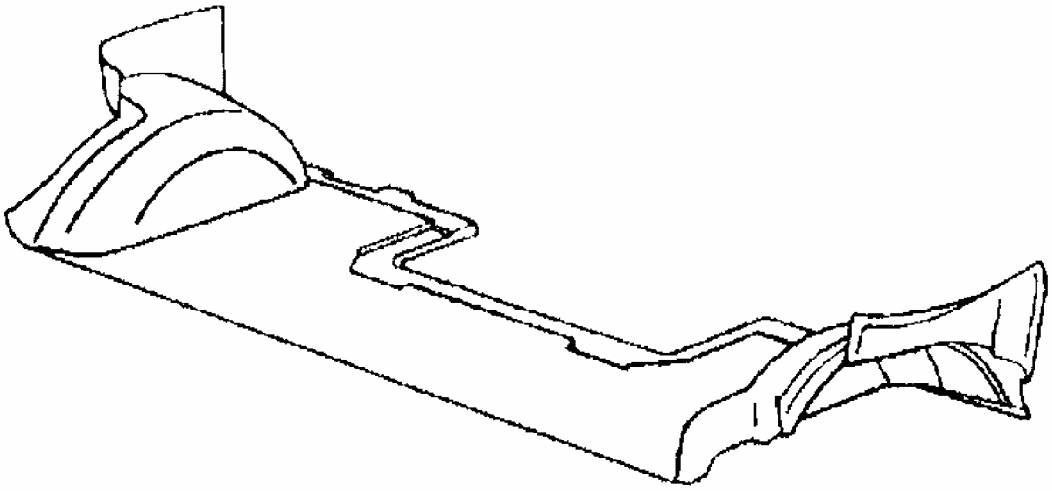

G01734380

Fig. 57: Identifying Rear Compartment Carpet
Courtesy of GENERAL MOTORS CORP.

Installation Procedure

1. Position the carpet under the speaker grilles and under the rear/end corner carpet trim panels.

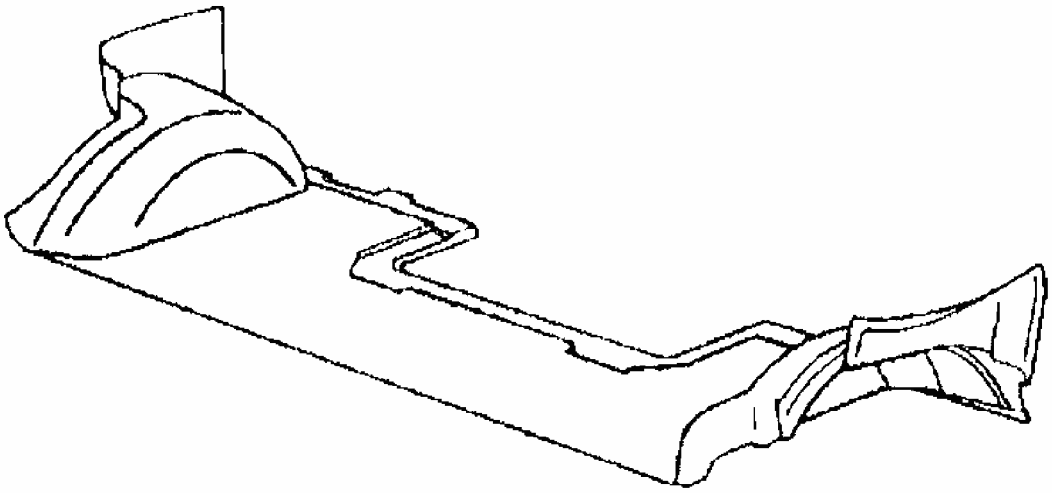

G01734381

Fig. 58: Identifying Rear Compartment Carpet
Courtesy of GENERAL MOTORS CORP.

2. Install the center rear floor stowage compartment cover latch striker retainers.
3. Install the roof lift off panel forward stowage bracket carpet retainers.
4. Install the roof lift off panel forward stowage brackets. Rotate the brackets 90 degrees counterclockwise to secure.

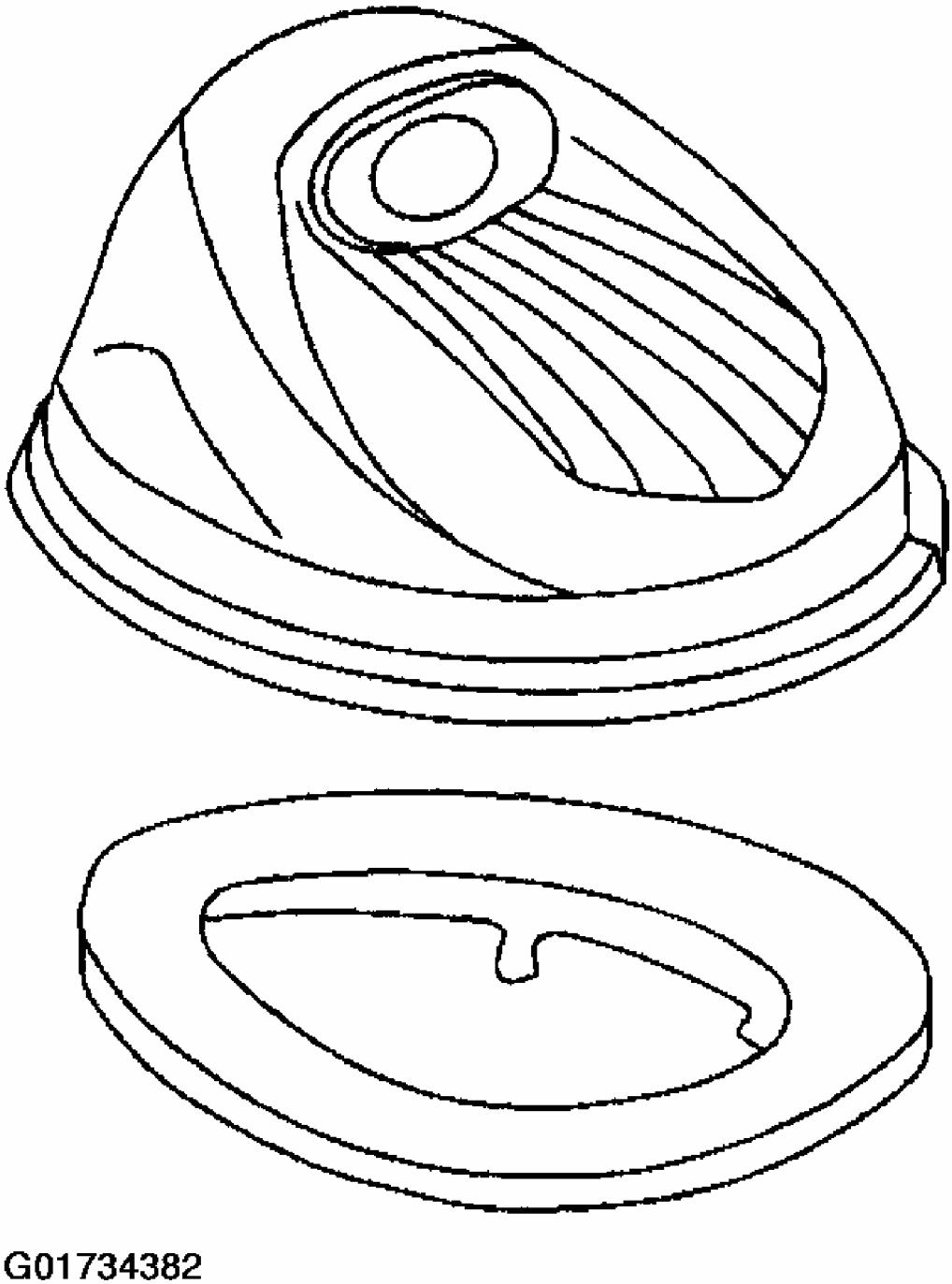

Fig. 59: Installing Roof Lift Off Panel Forward Stowage Brackets
Courtesy of GENERAL MOTORS CORP.

5. Install the right, left, and center rear stowage compartment covers.

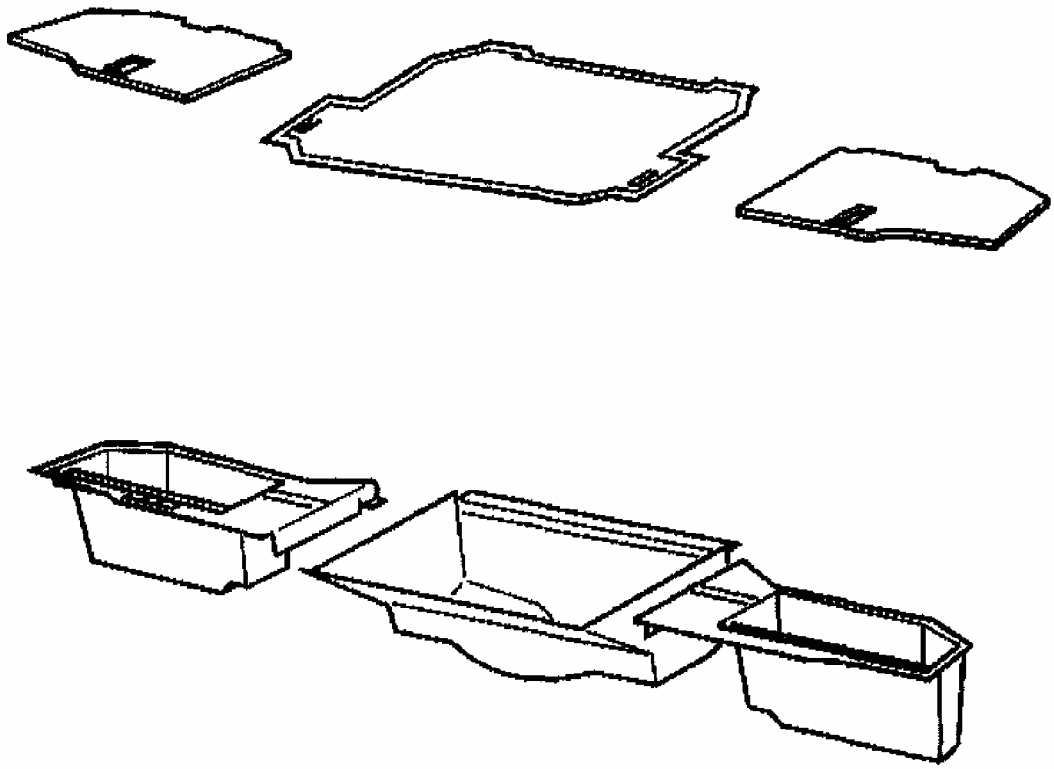

Fig. 60: Identifying Rear Stowage Compartment Covers
Courtesy of GENERAL MOTORS CORP.

CARPET REPLACEMENT - REAR COMPARTMENT FLOOR (HARDTOP)

Removal Procedure

1. Remove the floor center stowage cover.

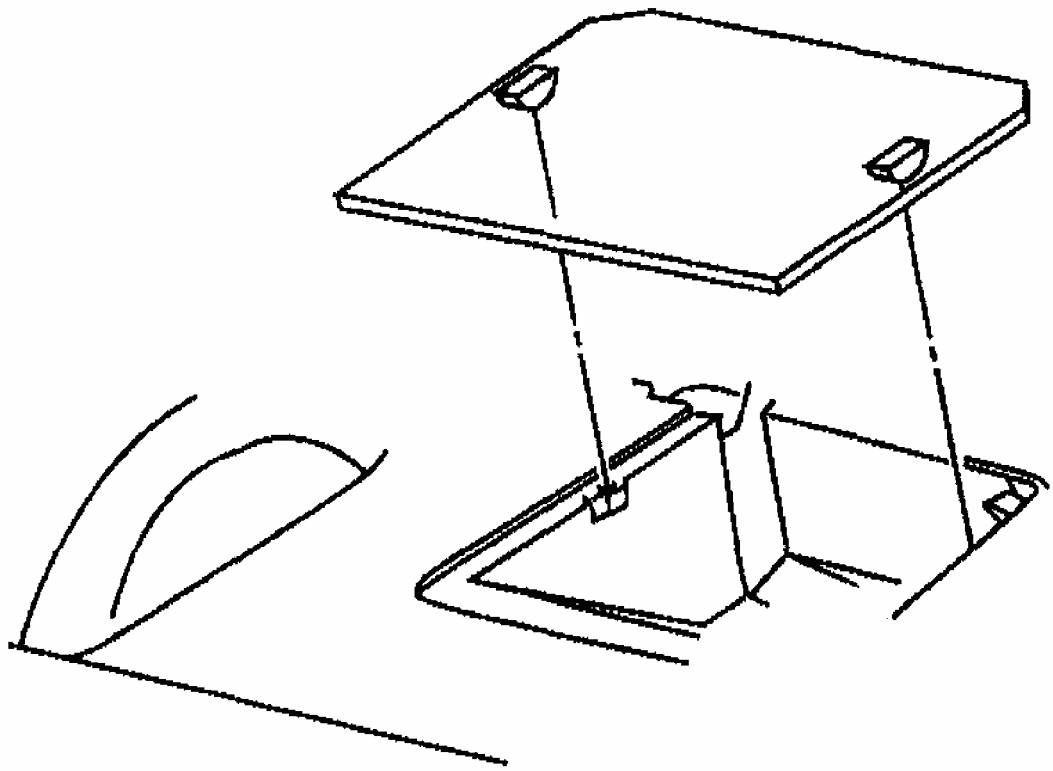

Fig. 61: Removing Floor Center Stowage Cover
Courtesy of GENERAL MOTORS CORP.

2. Slide the cargo lamps up out of the corners of the carpet.

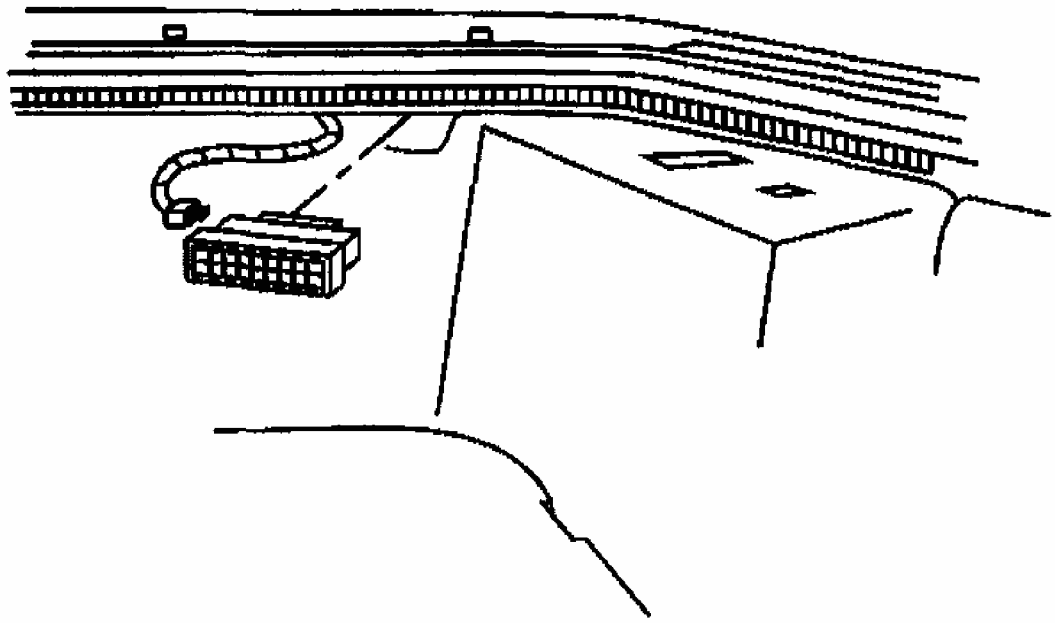

G01734385

Fig. 62: Removing Cargo Lamps
Courtesy of GENERAL MOTORS CORP.

3. Remove the trim panels from the rear compartment supports.

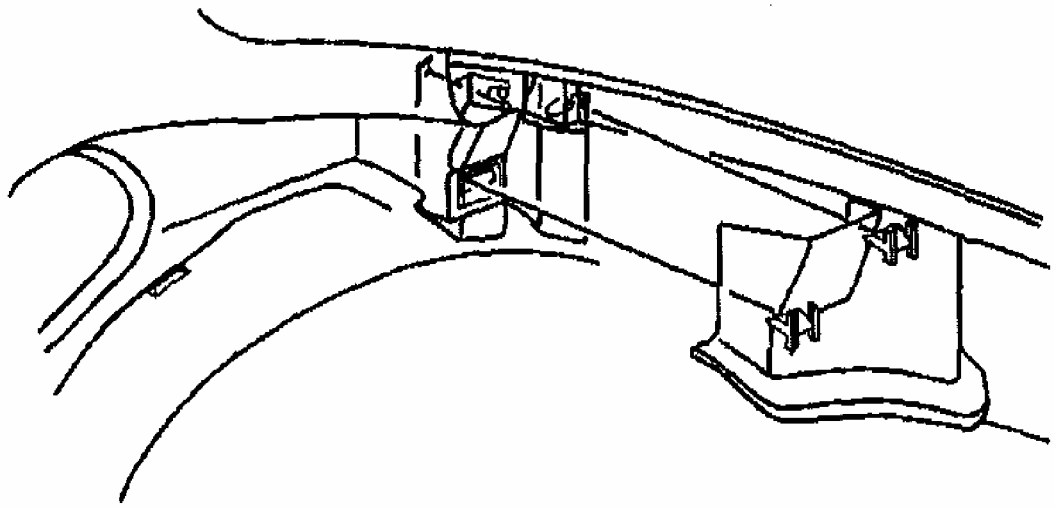

G01734386

Fig. 63: Removing Trim Support Panels

Courtesy of GENERAL MOTORS CORP.

4. Remove the rear compartment side trim panels. Refer to **Trim Panel Replace - Rear Compartment Front Side (Coupe)** or **Trim Panel Replace - Rear Compartment Front Side (Convertible)** or **Trim Panel Replace - Rear Compartment Front Side (Hardtop)** .

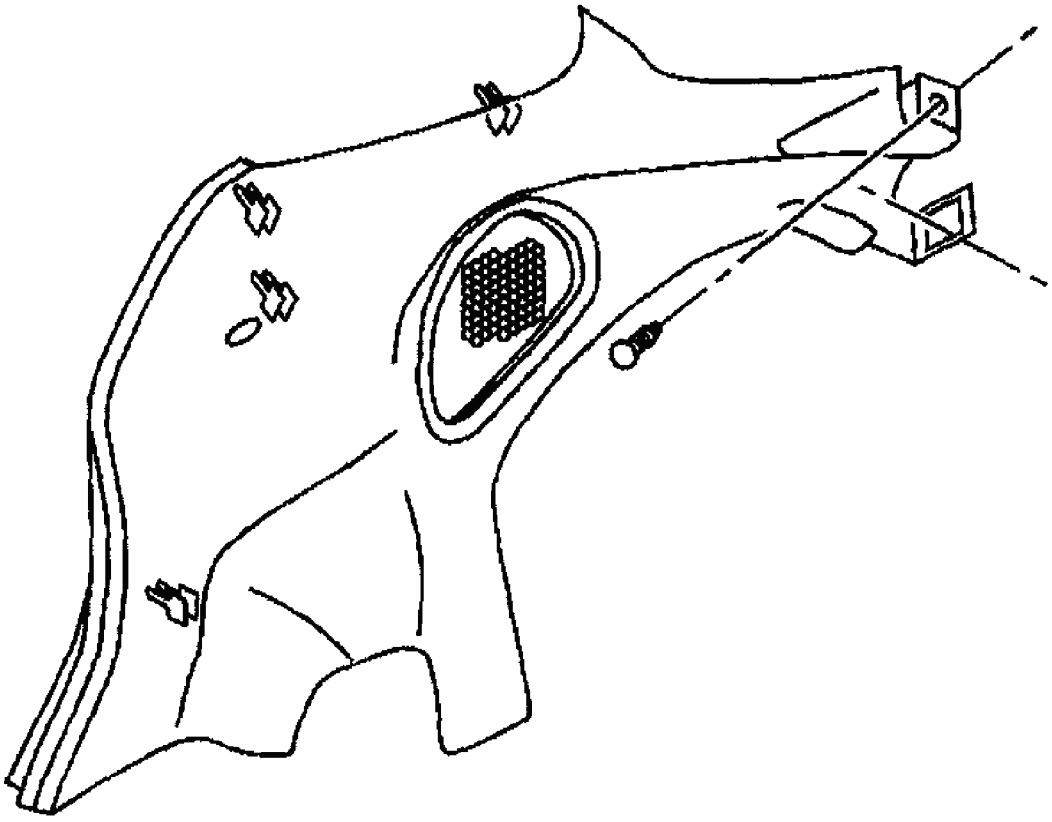

G01734387

Fig. 64: Removing Rear Compartment Side Trim Panel Fasteners
Courtesy of GENERAL MOTORS CORP.

5. Remove the floor carpet from around the rear compartment supports.
6. Pull the carpet out from under the flange along the rear of the stowage area.
7. Remove the carpet from the vehicle.

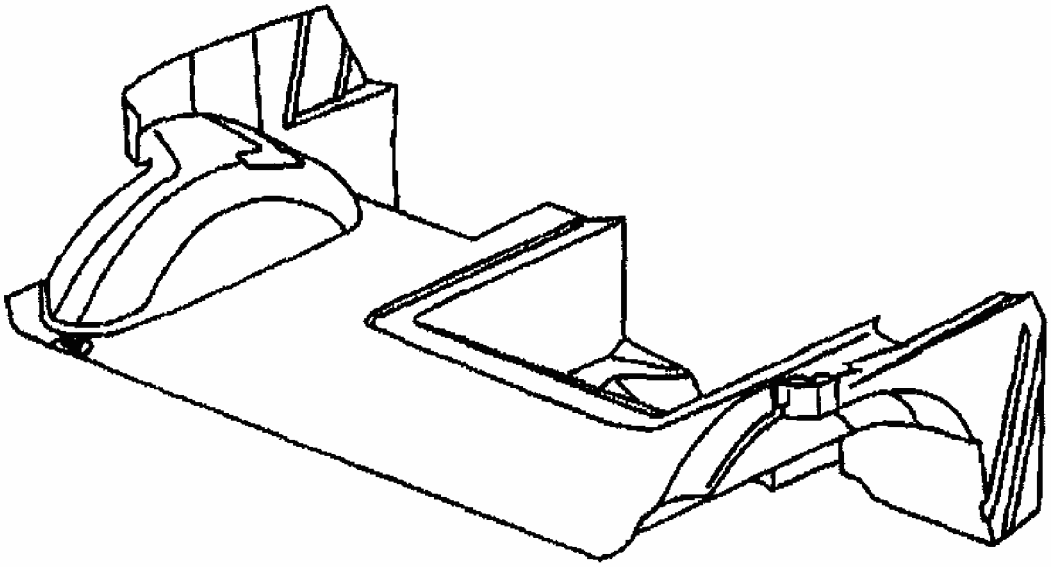

G01734388

Fig. 65: Identifying Rear Compartment Carpet
Courtesy of GENERAL MOTORS CORP.

Installation Procedure

1. Position the carpet in the vehicle and around the rear compartment supports.

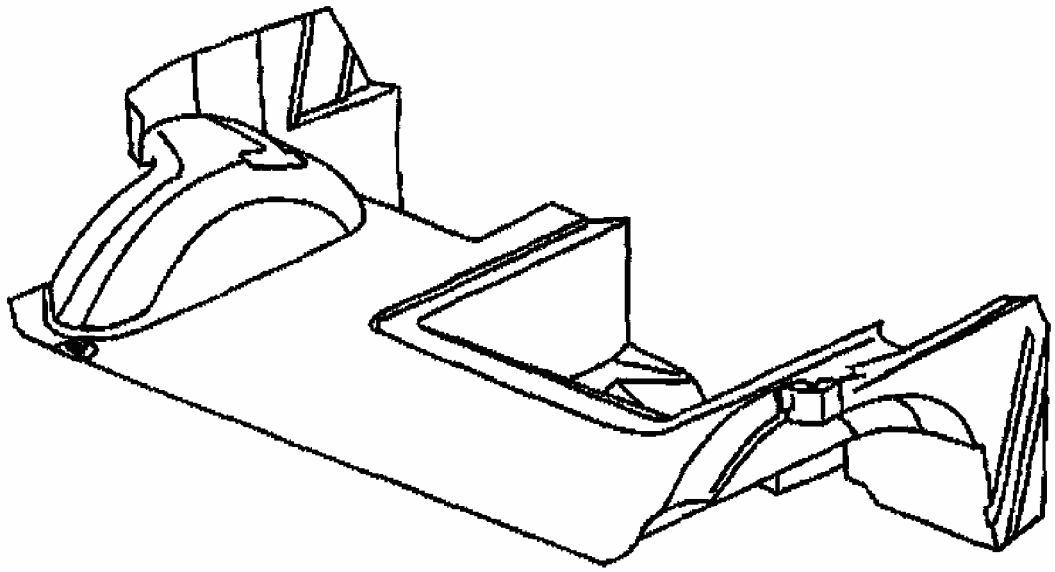

G01734389

Fig. 66: Identifying Rear Compartment Carpet
Courtesy of GENERAL MOTORS CORP.

2. Install the rear compartment side trim panels. Refer to **Trim Panel Replace - Rear Compartment Front Side (Coupe)** or **Trim Panel Replace - Rear Compartment Front Side (Convertible)** or **Trim Panel Replace - Rear Compartment Front Side (Hardtop)** .

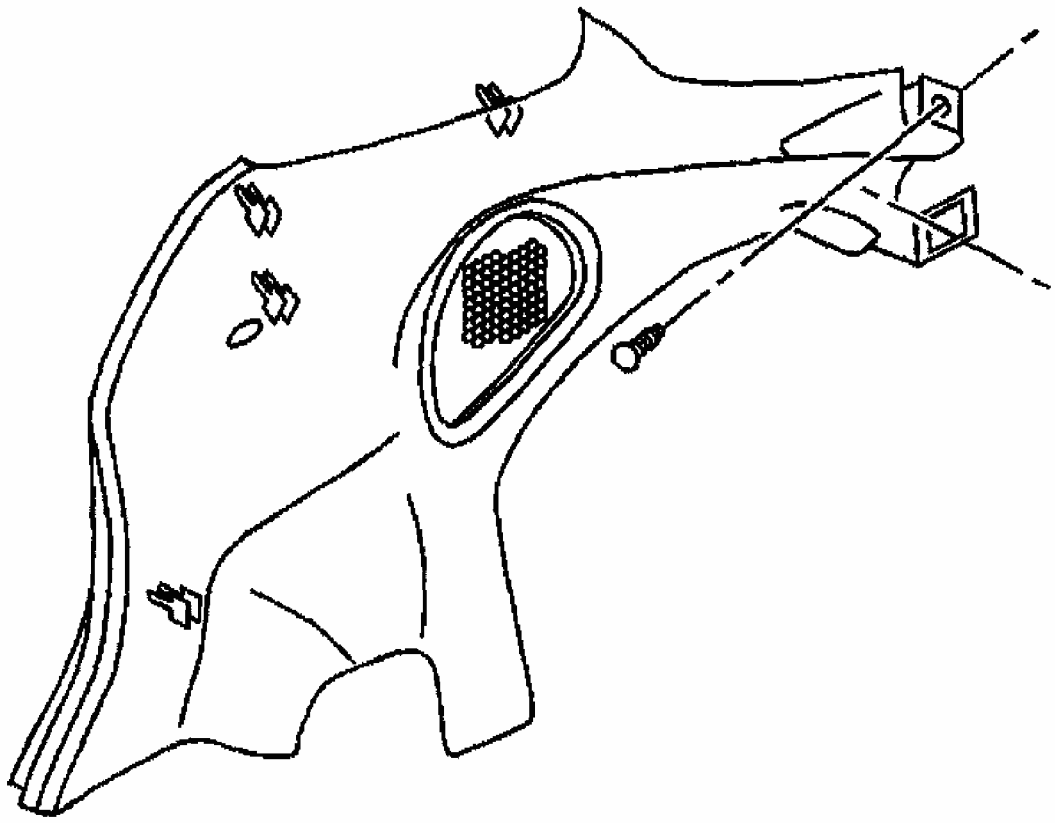

Fig. 67: Installing Rear Compartment Side Trim Panel Fasteners
Courtesy of GENERAL MOTORS CORP.

3. Install the trim support panels to the rear compartment supports.

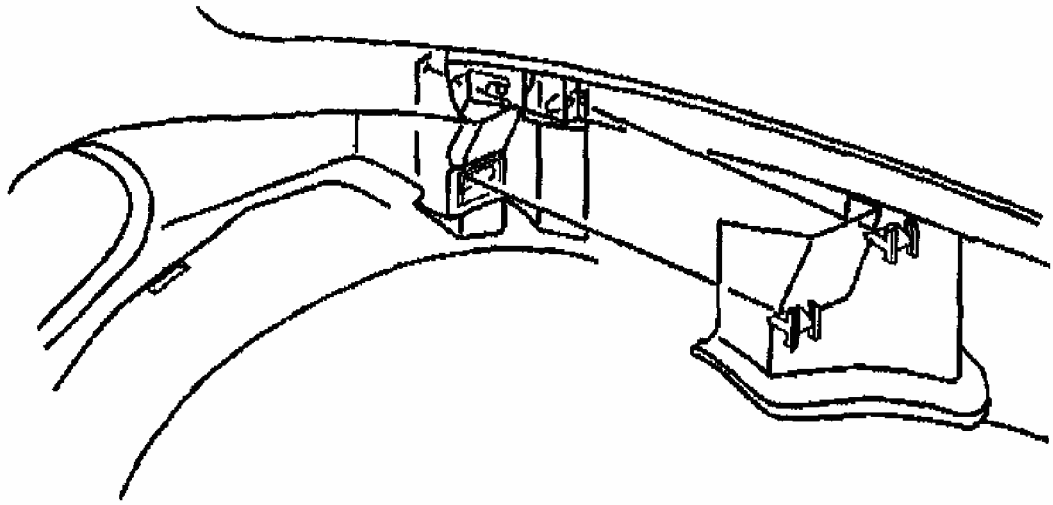

Fig. 68: Installing Trim Support Panels
Courtesy of GENERAL MOTORS CORP.

4. Snap the cargo lamps into the carpet.
5. Position the fuel door release cable through the carpet and secure the end tab of the cable with the hook and loop patch to the carpet.

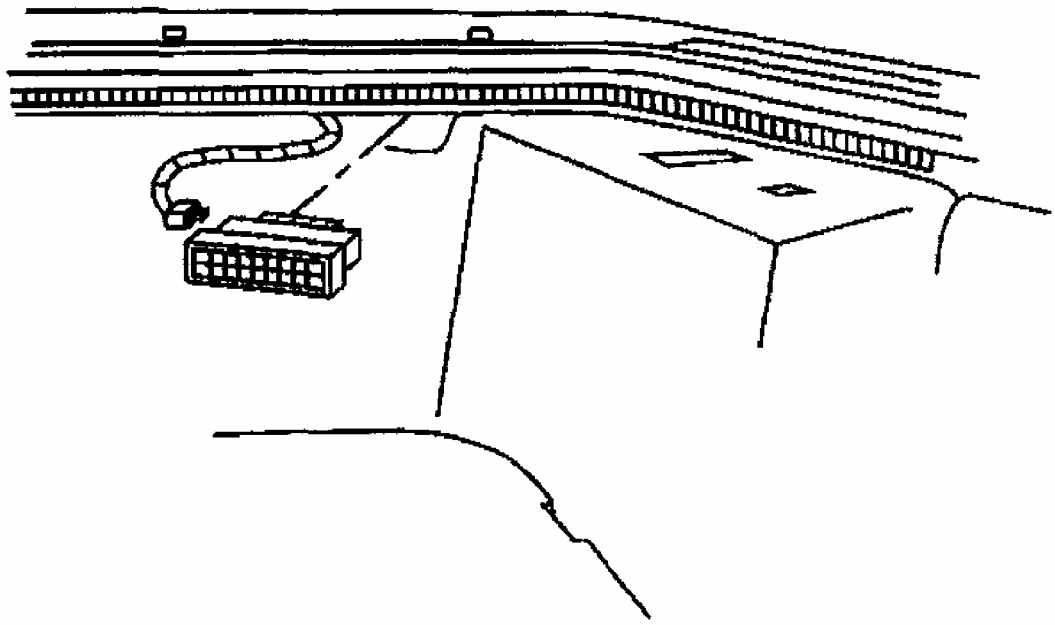

Fig. 69: Installing Cargo Lamps
Courtesy of GENERAL MOTORS CORP.

6. Install the rear floor center stowage cover.

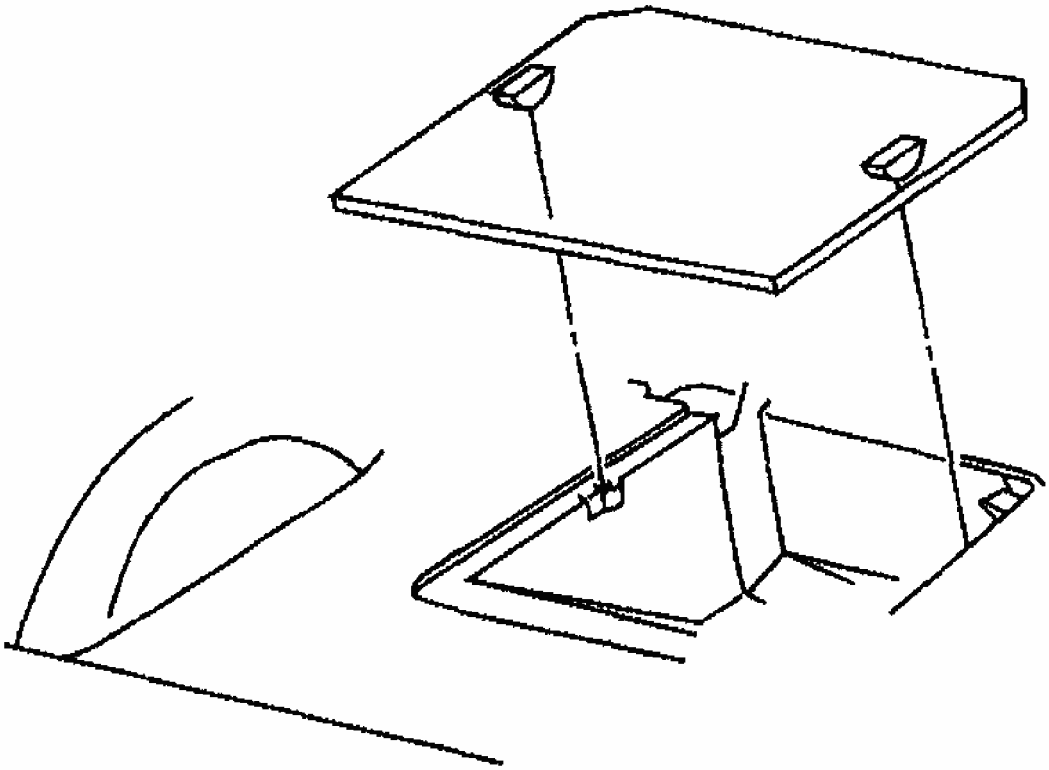

Fig. 70: Installing Rear Floor Center Stowage Cover
Courtesy of GENERAL MOTORS CORP.

TRIM PANEL CARPET - REAR COMPARTMENT REAR CENTER (CONVERTIBLE)

Removal Procedure

1. Remove the cargo net, if equipped.
2. Remove the rear center stowage compartment cover.
3. Remove the rear side stowage compartment covers.

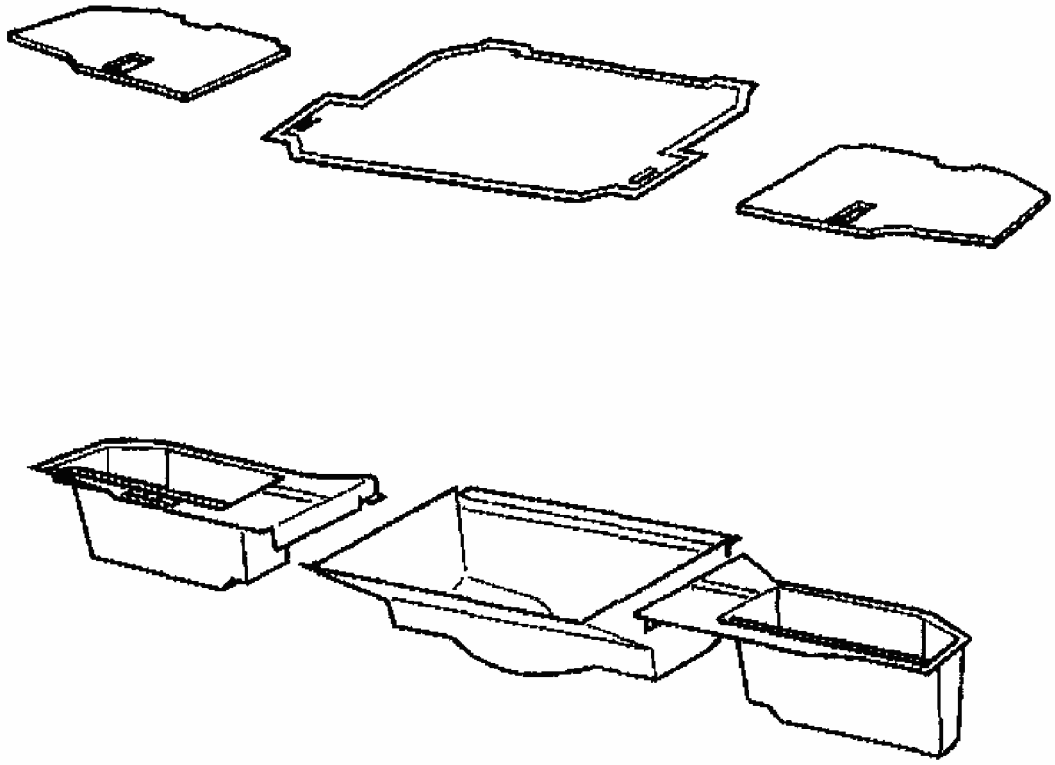

Fig. 71: Identifying Rear Stowage Compartment Covers
Courtesy of GENERAL MOTORS CORP.

4. Remove the corner trim panels. Refer to **Trim Panel Replace - Rear Compartment Front Side (Coupe)** or **Trim Panel Replace - Rear Compartment Front Side (Convertible)** or **Trim Panel Replace - Rear Compartment Front Side (Hardtop)** .

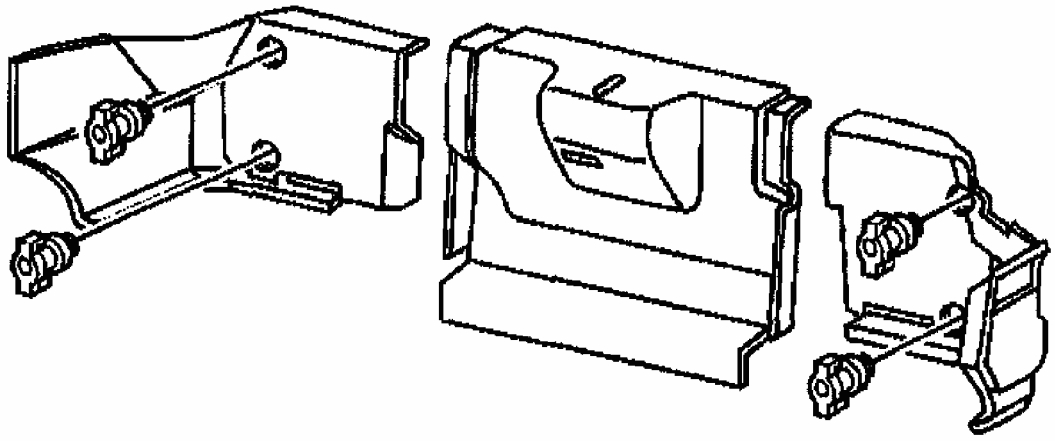

Fig. 72: Removing Cargo Net Attaching Nuts
Courtesy of GENERAL MOTORS CORP.

5. Remove the center carpet panel.

Installation Procedure

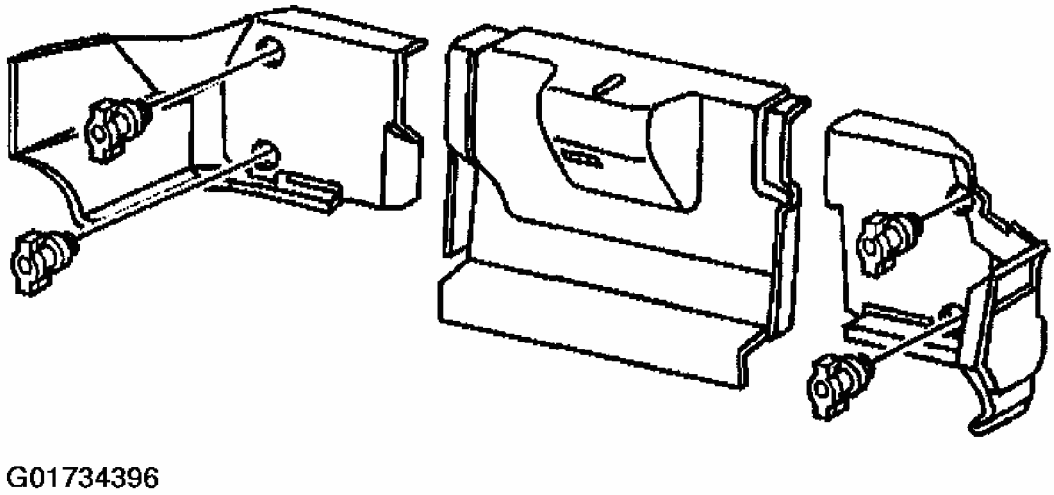

Fig. 73: Installing Cargo Net Attaching Nuts
Courtesy of GENERAL MOTORS CORP.

1. Install the rear center carpet panel.
2. Position the fuel door manual release cable through the slot in the rear center carpet

panel.

3. Install the rear corner carpet panels. Refer to **Trim Panel Replace - Rear Compartment Front Side (Coupe)** or **Trim Panel Replace - Rear Compartment Front Side (Convertible)** or **Trim Panel Replace - Rear Compartment Front Side (Hardtop)** .
4. Install the cargo net, if equipped.
5. Install the rear stowage compartment covers.

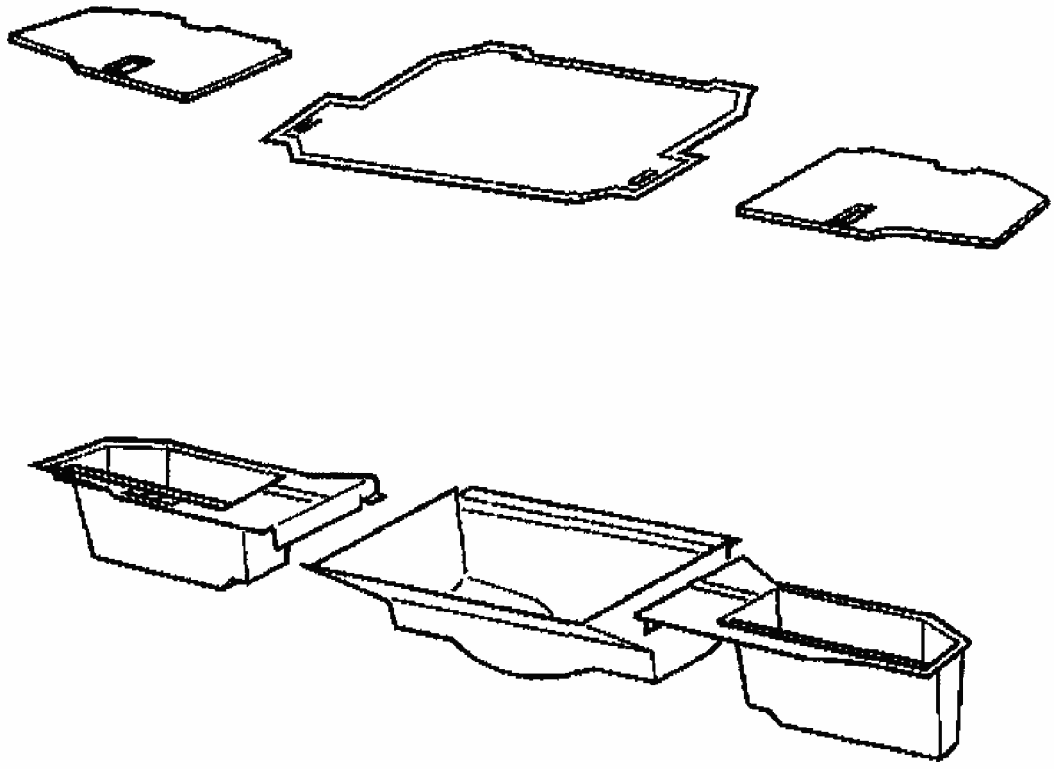

Fig. 74: Identifying Rear Stowage Compartment Covers
Courtesy of GENERAL MOTORS CORP.

TRIM PANEL CARPET - REAR COMPARTMENT REAR CENTER (COUPE)

Removal Procedure

1. Remove the rear side stowage compartment covers.
2. Remove the rear center stowage compartment cover.

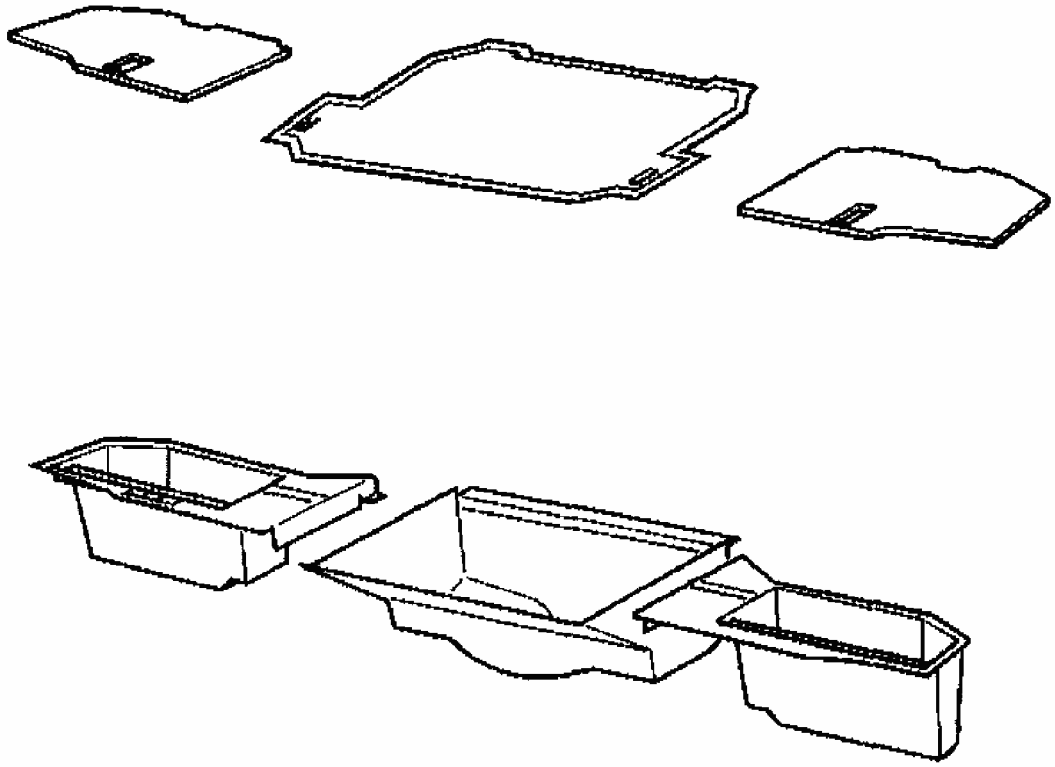

Fig. 75: Identifying Rear Stowage Compartment Covers
Courtesy of GENERAL MOTORS CORP.

3. Remove the corner carpet trim panels. Refer to **Trim Panel Carpet Replacement - Rear Corner (Coupe)** or **Trim Panel Carpet Replacement - Rear Corner (Convertible)** or **Trim Panel Carpet Replacement - Rear Corner (Hardtop)** .
4. Remove the center carpet trim panel.

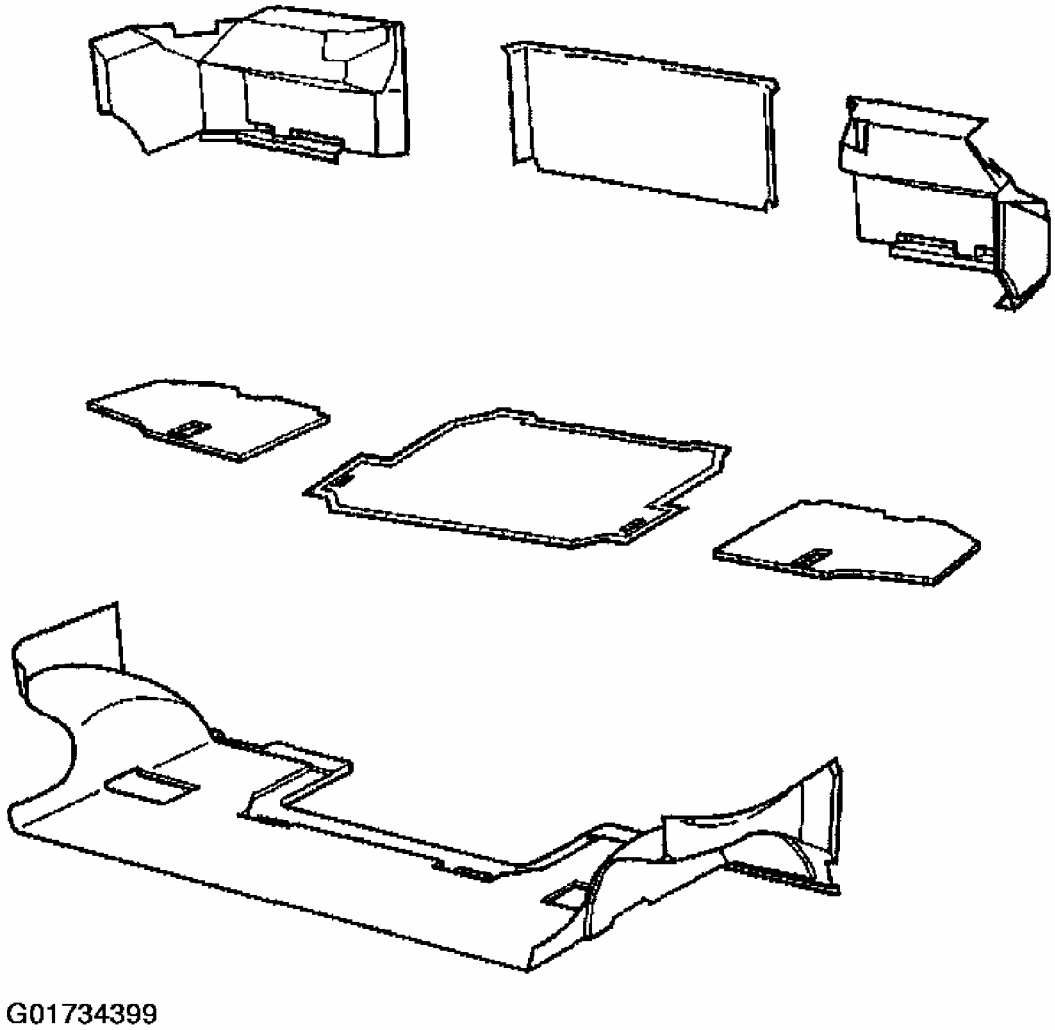

Fig. 76: Identifying Rear Compartment Carpet
Courtesy of GENERAL MOTORS CORP.

Installation Procedure

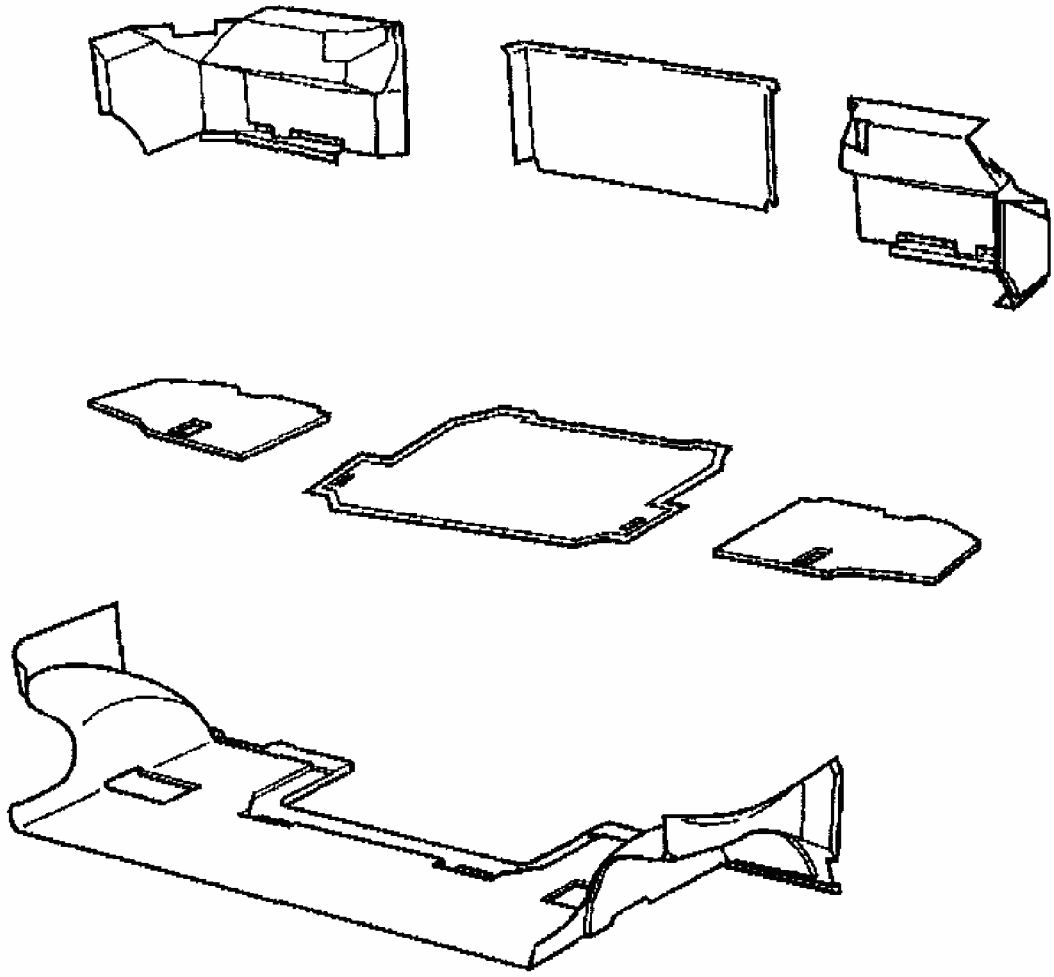

Fig. 77: Identifying Rear Compartment Carpet
Courtesy of GENERAL MOTORS CORP.

1. Install the center carpet trim panel.
2. Install the corner carpet trim panels. Refer to **Trim Panel Carpet Replacement - Rear Corner (Coupe)** or **Trim Panel Carpet Replacement - Rear Corner (Convertible)** or **Trim Panel Carpet Replacement - Rear Corner (Hardtop)** .
3. Install the rear center compartment cover.
4. Install the rear side stowage compartment covers.

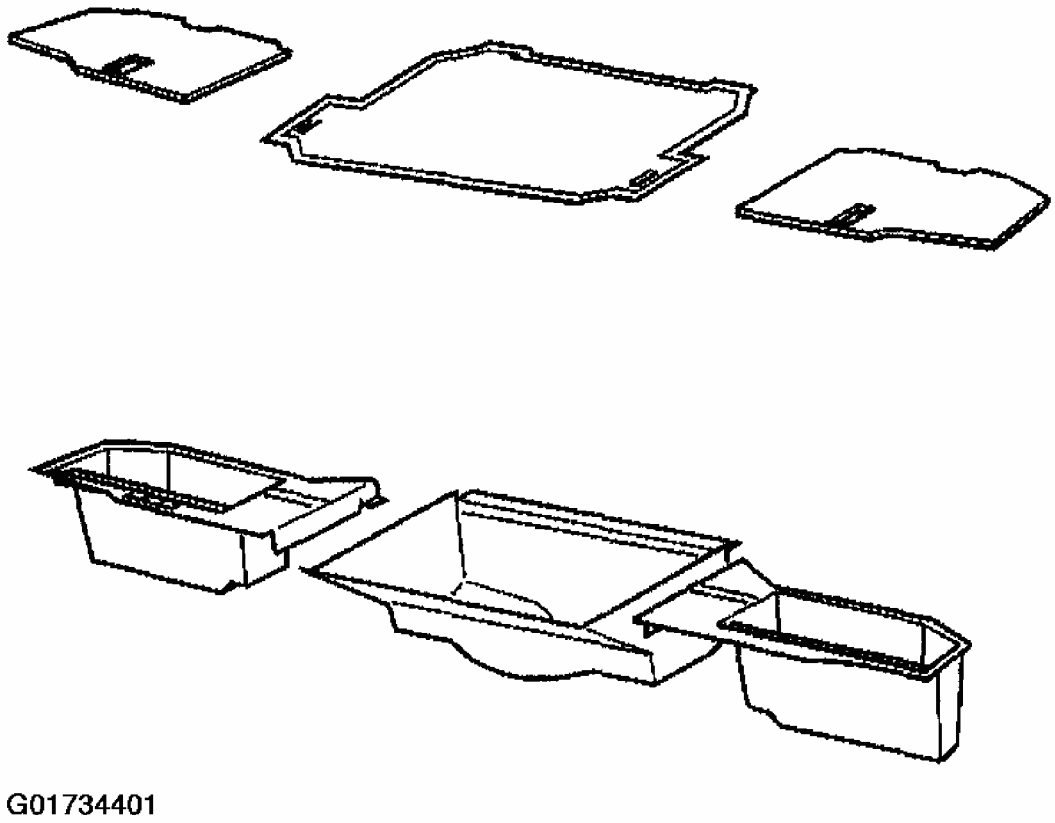

Fig. 78: Identifying Rear Stowage Compartment Covers
Courtesy of GENERAL MOTORS CORP.

TRIM PANEL CARPET - REAR COMPARTMENT REAR CENTER (HARDTOP)

Removal Procedure

1. Remove the convenience net nuts.

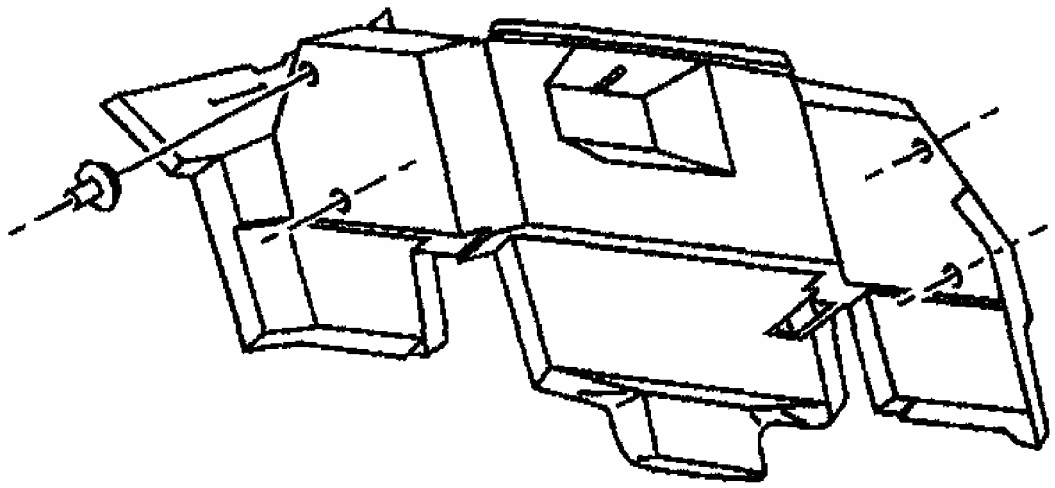

G01734402

Fig. 79: Removing Convenience Net Nuts
Courtesy of GENERAL MOTORS CORP.

2. Remove the cargo courtesy lamps.

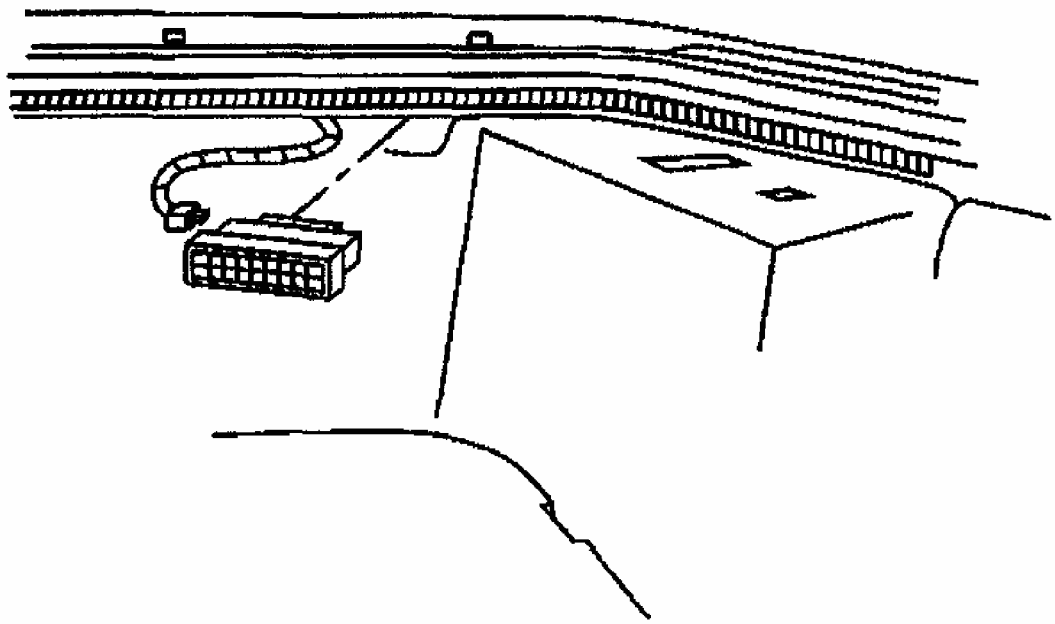

G01734403

Fig. 80: Removing Cargo Lamps
Courtesy of GENERAL MOTORS CORP.

3. Remove the floor center stowage cover.

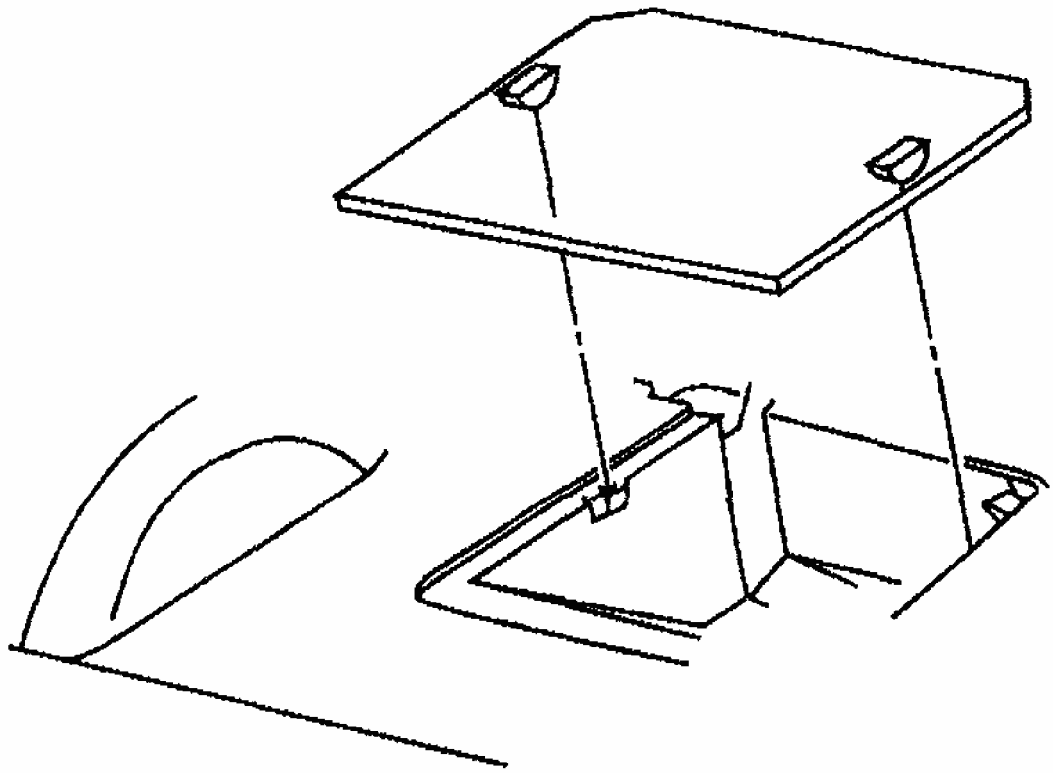

Fig. 81: Removing Floor Center Stowage Cover
Courtesy of GENERAL MOTORS CORP.

4. Pull the trim panel out from under the upper flange of the rear body panel.
5. Remove the rear trim panel.

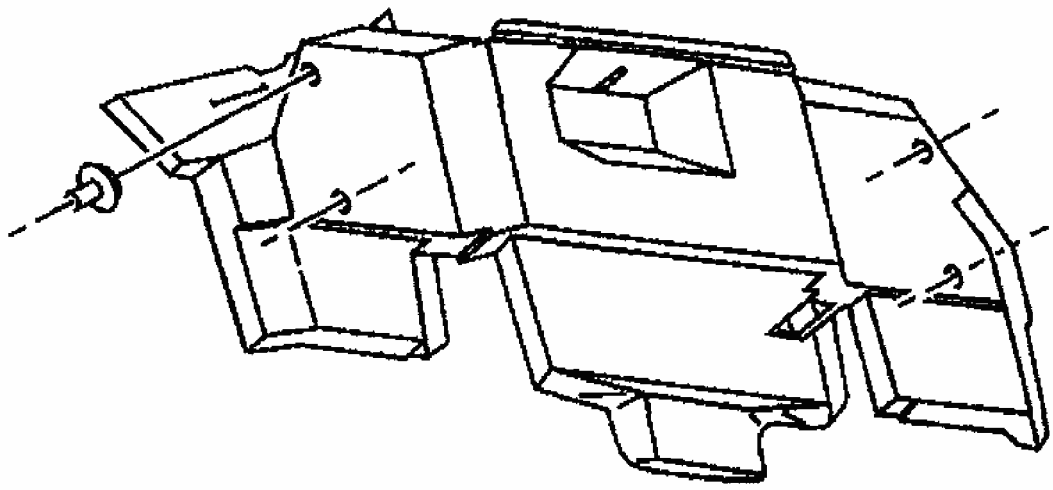

G01734405

Fig. 82: Removing Rear Compartment Trim Panel
Courtesy of GENERAL MOTORS CORP.

Installation Procedure

1. Install the rear compartment rear trim panel to the studs on the rear body panel.
2. Route the manual release cable down behind the carpet trim panel and out through the slit in the trim panel into the floor stowage area.
3. Tuck the trim panel upper flange under the rim of the rear panel.
4. Install the convenience net installation nuts.

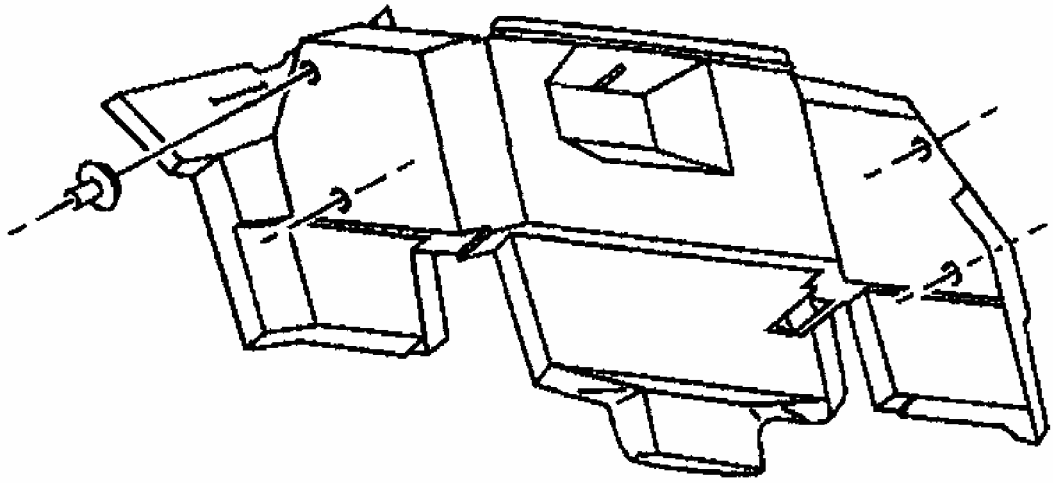

G01734406

Fig. 83: Installing Rear Compartment Trim Panel
Courtesy of GENERAL MOTORS CORP.

5. Install the cargo lamps.
6. Tuck the rear trim behind the sides of the floor carpet.

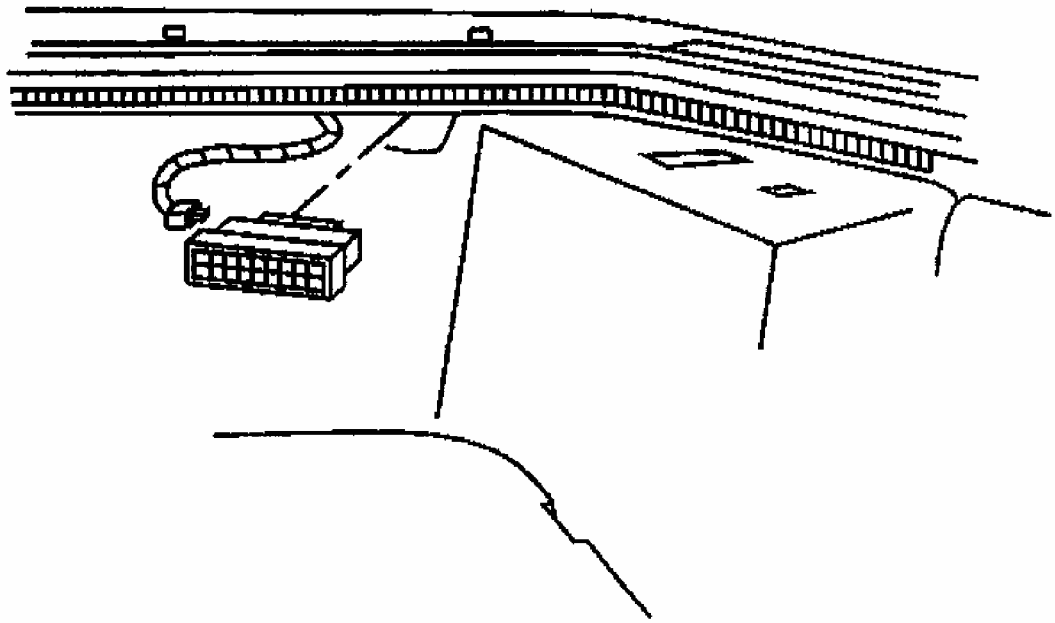

G01734407

Fig. 84: Installing Cargo Lamps
Courtesy of GENERAL MOTORS CORP.

7. Install the floor center stowage cover.

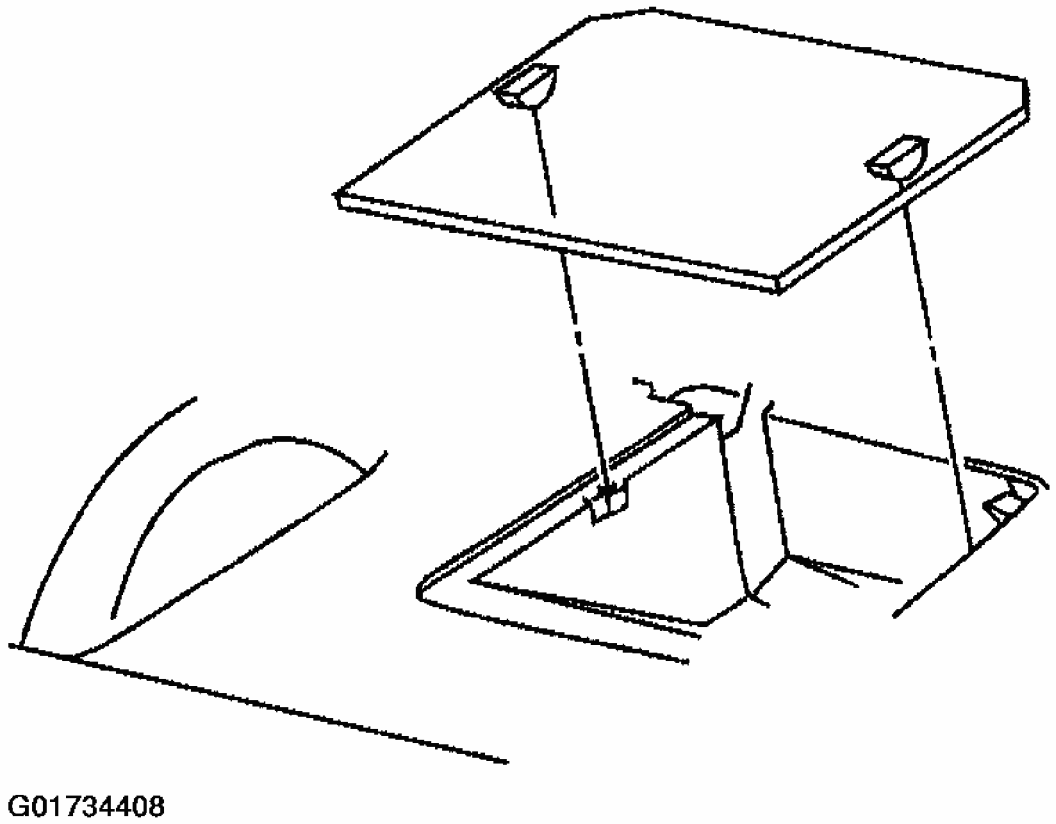

Fig. 85: Installing Floor Center Stowage Cover
Courtesy of GENERAL MOTORS CORP.

TRIM PANEL CARPET REPLACEMENT - REAR CORNER (COUPE)

Removal Procedure

1. Remove the rear floor side stowage compartment cover.
2. Remove the rear cargo net, if equipped.
3. Unscrew the rear cargo net attachment nut.

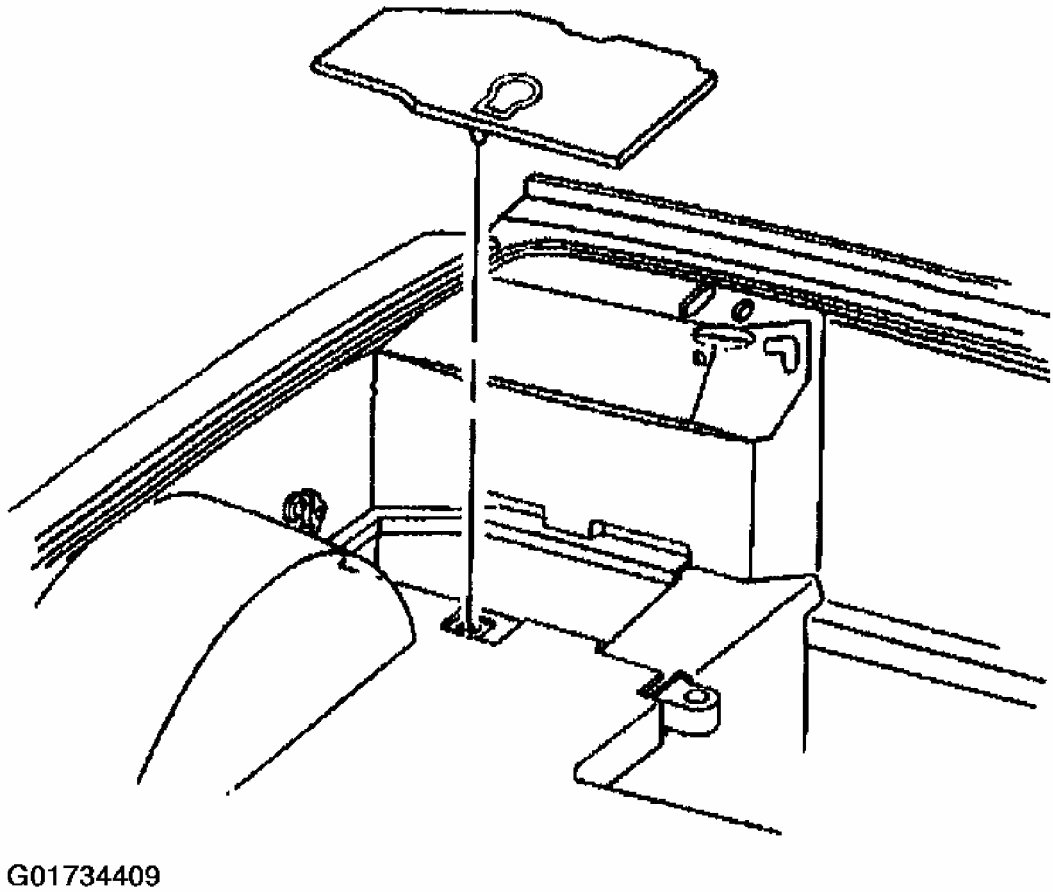

Fig. 86: Removing Rear Floor Side Stowage Compartment Cover
Courtesy of GENERAL MOTORS CORP.

4. Slide the cargo lamp up out of the trim panel.

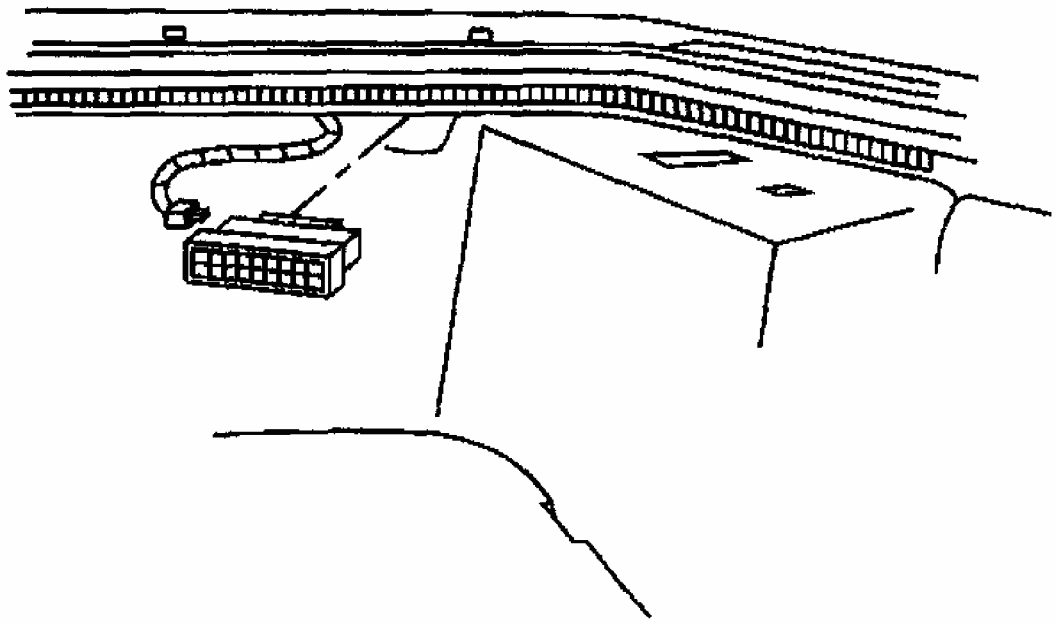

Fig. 87: Removing Cargo Lamp
Courtesy of GENERAL MOTORS CORP.

5. Pull the corner carpet trim panel loose.
6. Remove the panel by sliding the carpet panel toward the center of the vehicle.

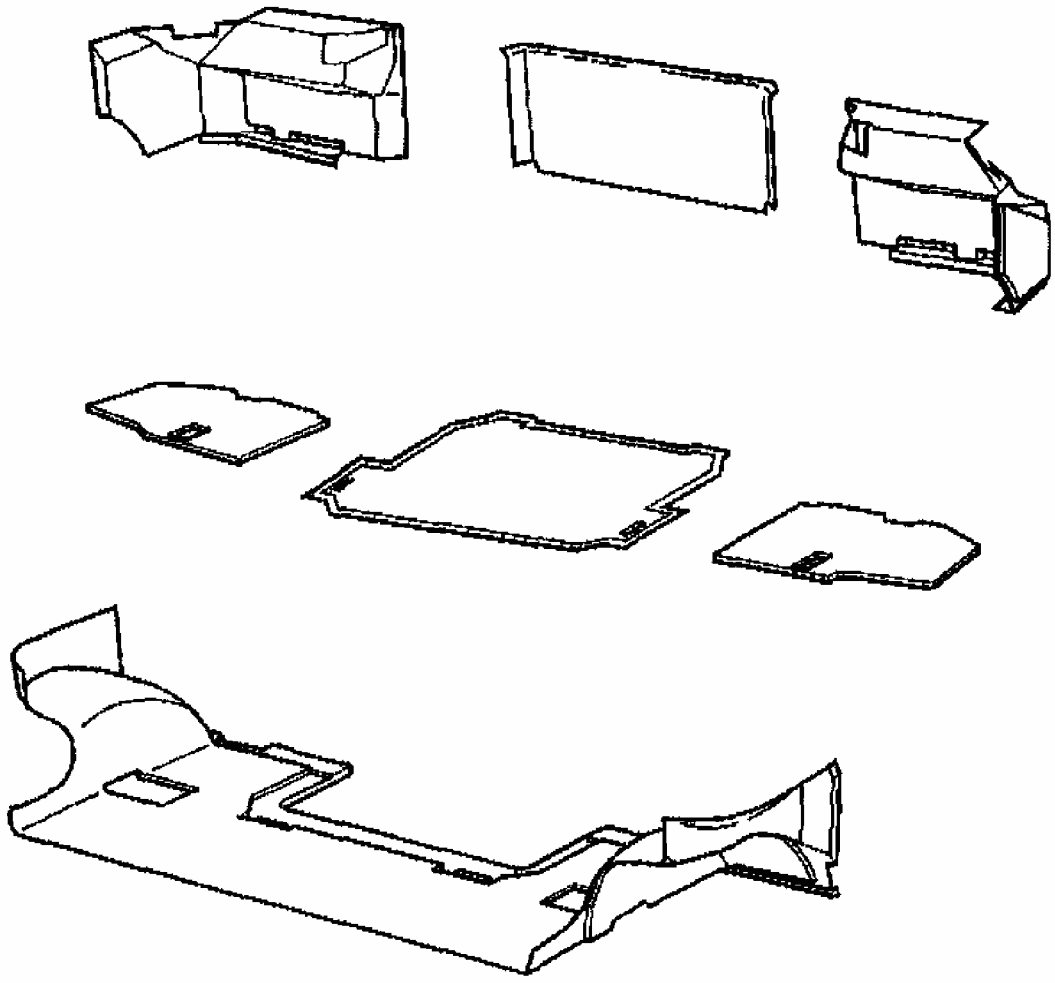

Fig. 88: Identifying Rear Compartment Carpet
Courtesy of GENERAL MOTORS CORP.

Installation Procedure

1. Position the manual release cable through the slot in the corner carpet trim panel.
2. Install the corner carpet trim panel.

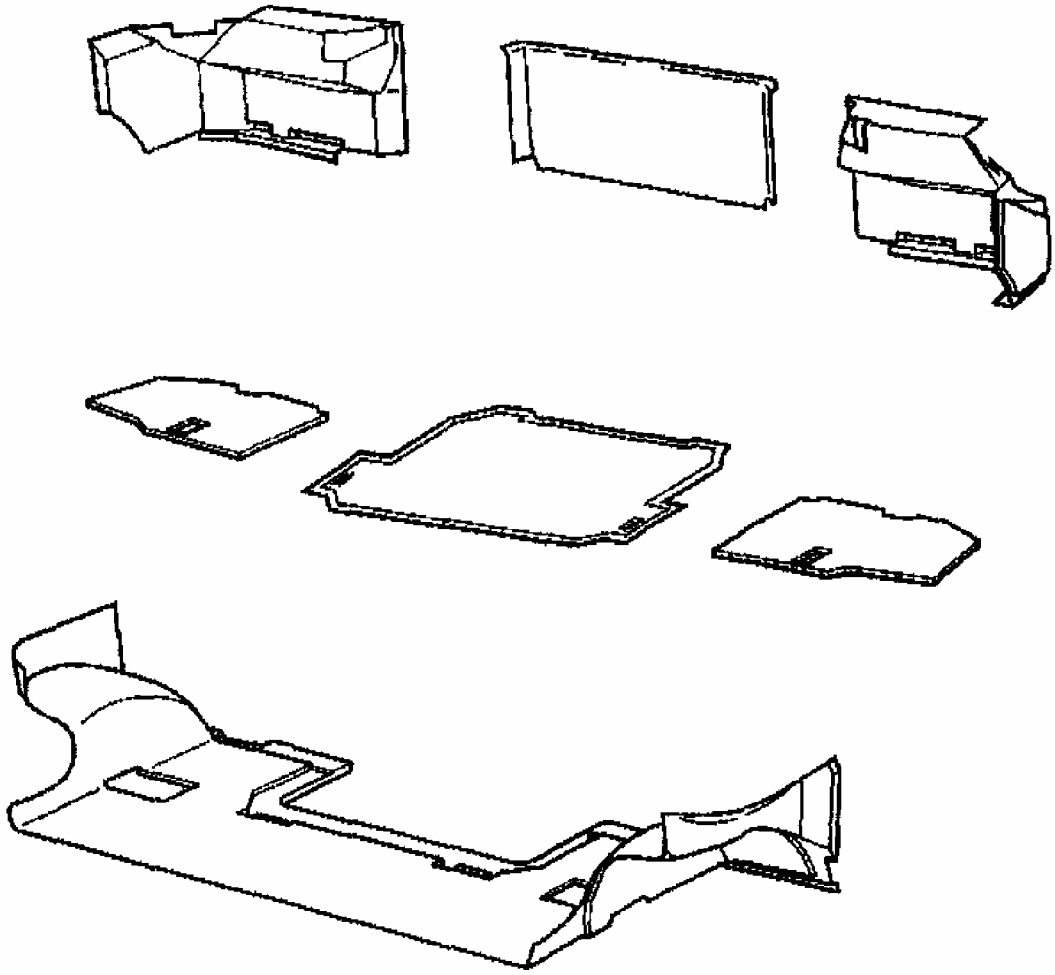

Fig. 89: Identifying Rear Compartment Carpet
Courtesy of GENERAL MOTORS CORP.

3. Snap the cargo lamp into the panel.

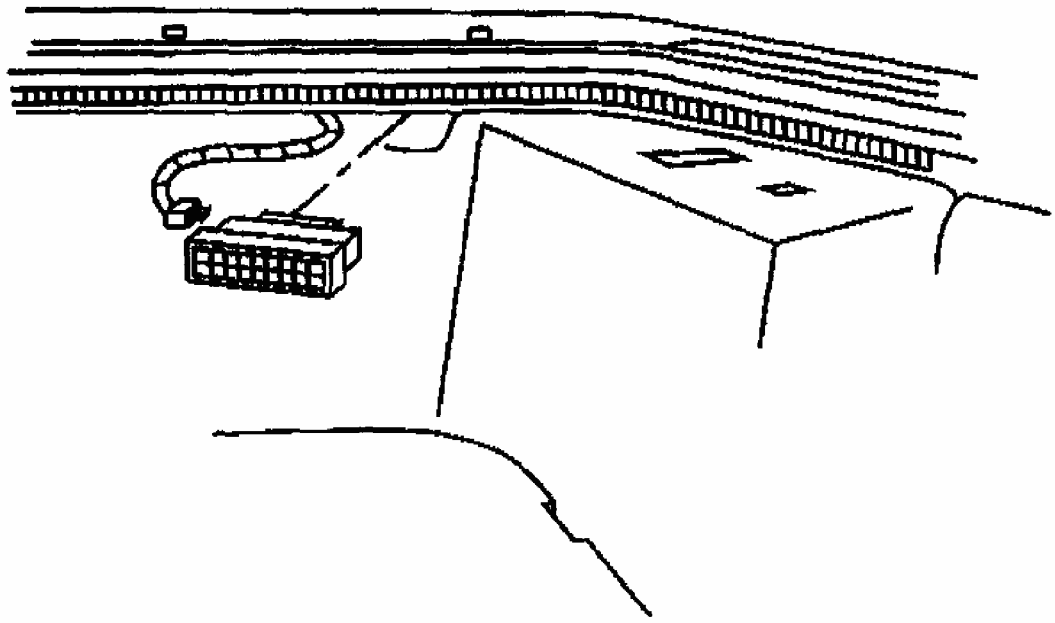

Fig. 90: Installing Cargo Lamp
Courtesy of GENERAL MOTORS CORP.

4. Install the cargo net attachment nut.
5. Install the rear floor side stowage compartment cover.
6. Install the cargo net, if removed.

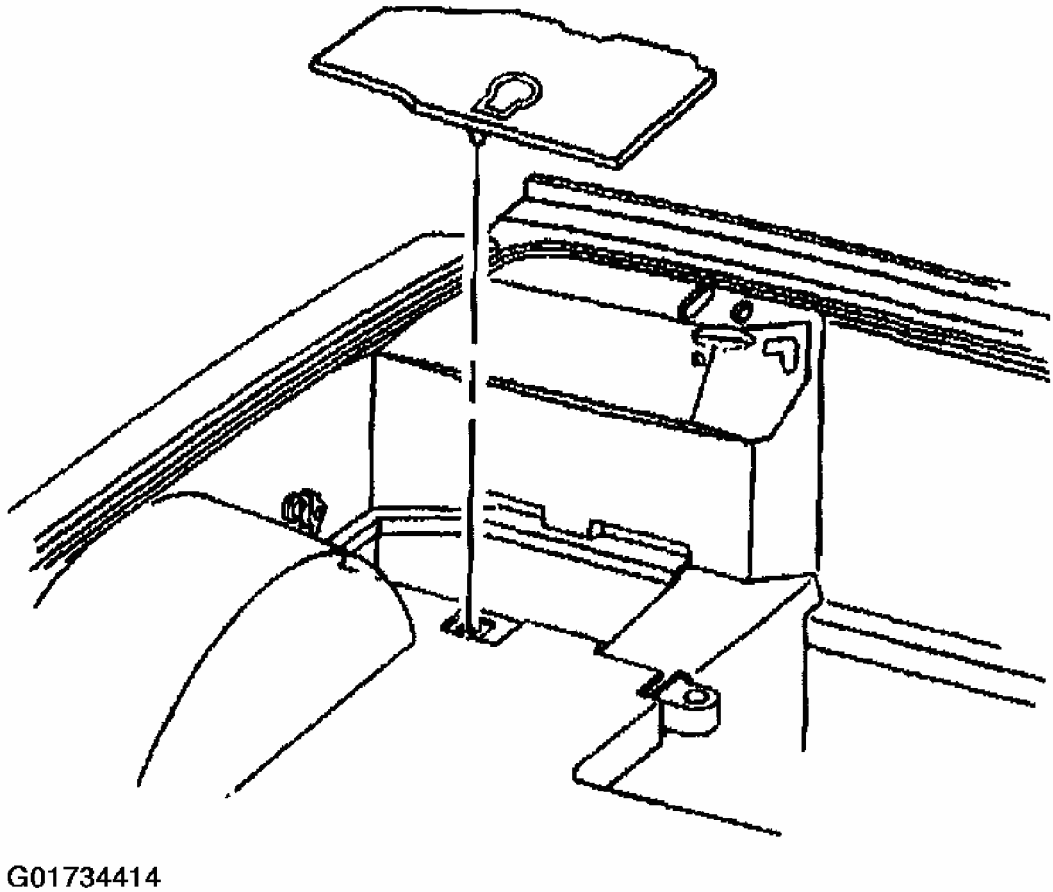

Fig. 91: Installing Rear Floor Side Stowage Compartment Cover
Courtesy of GENERAL MOTORS CORP.

TRIM PANEL CARPET REPLACEMENT - REAR CORNER (CONVERTIBLE)

Removal Procedure

1. Remove the rear floor side stowage compartment cover.

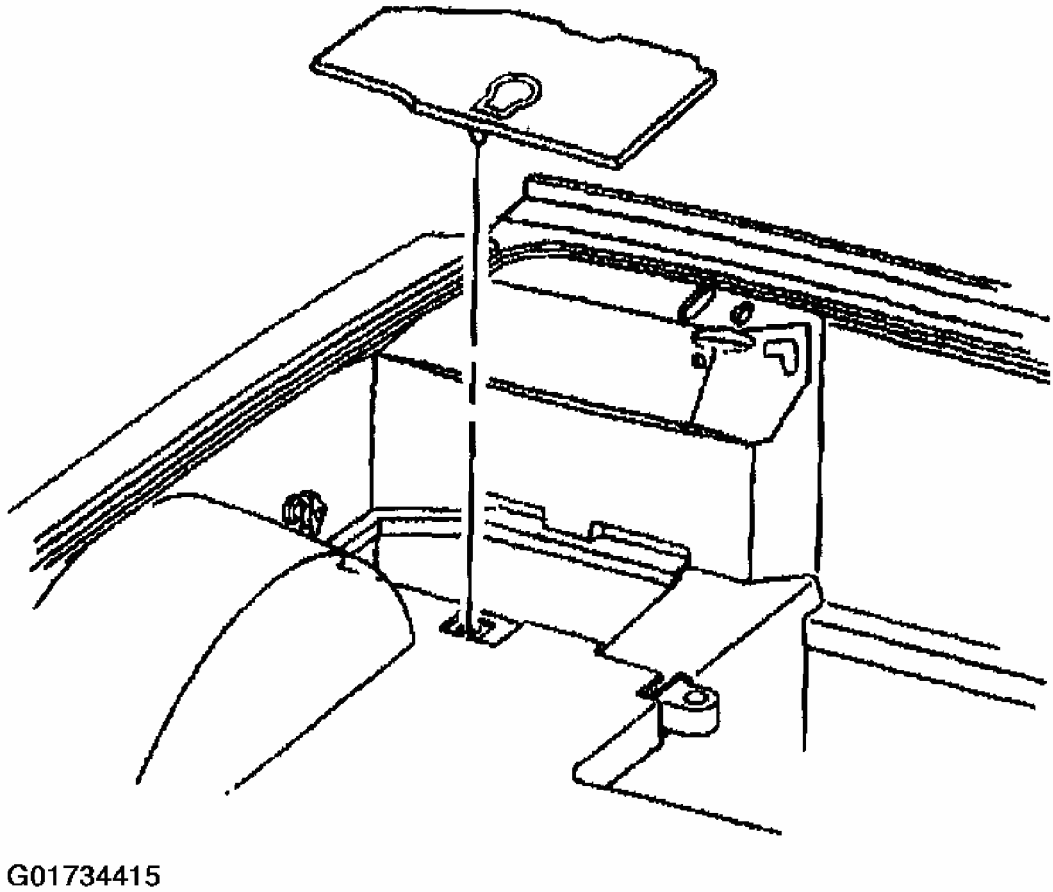

Fig. 92: Removing Rear Floor Side Stowage Compartment Cover
Courtesy of GENERAL MOTORS CORP.

2. Slide the cargo lamp up out of the trim panel, if equipped.
3. Remove the rear cargo net, if equipped.

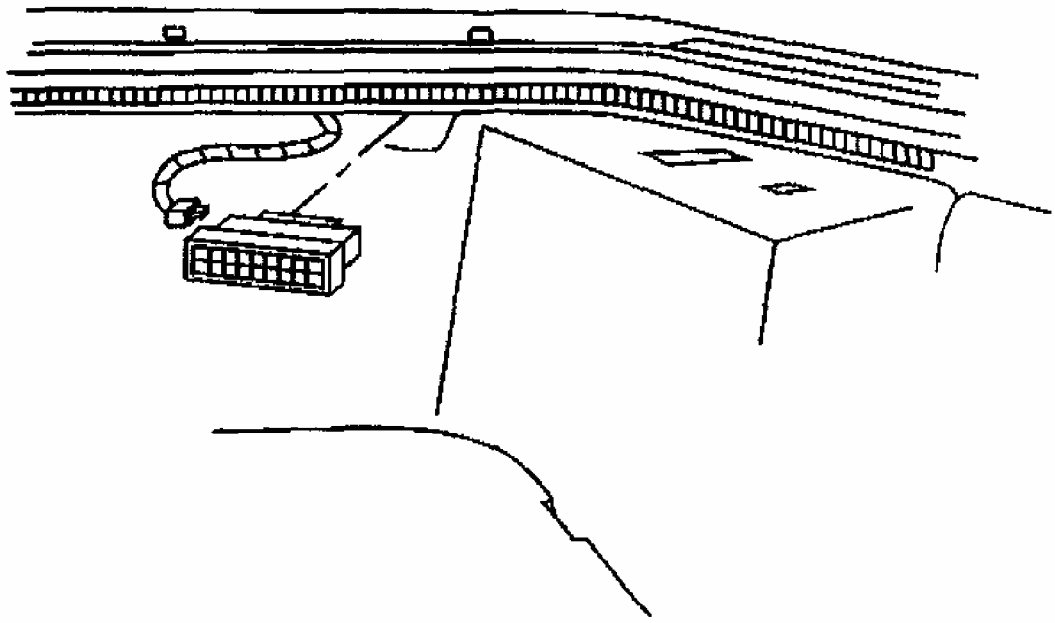

G01734416

Fig. 93: Removing Cargo Lamp
Courtesy of GENERAL MOTORS CORP.

4. Remove the cargo net attaching nuts.
5. Remove the corner carpet trim panel.

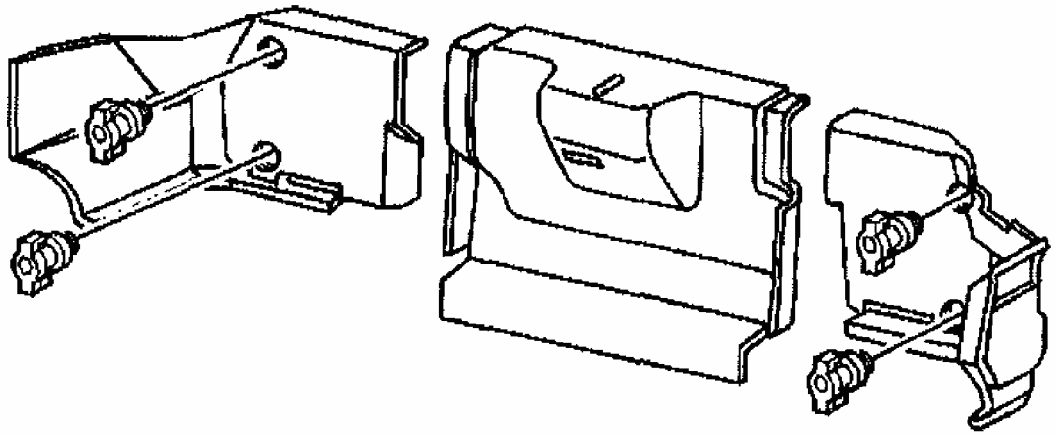

G01734417

Fig. 94: Removing Cargo Net Attachment Nuts
Courtesy of GENERAL MOTORS CORP.

Installation Procedure

1. Install the corner carpet trim panel.
2. Install the cargo net attachment nuts.
3. Install the cargo net, if equipped.

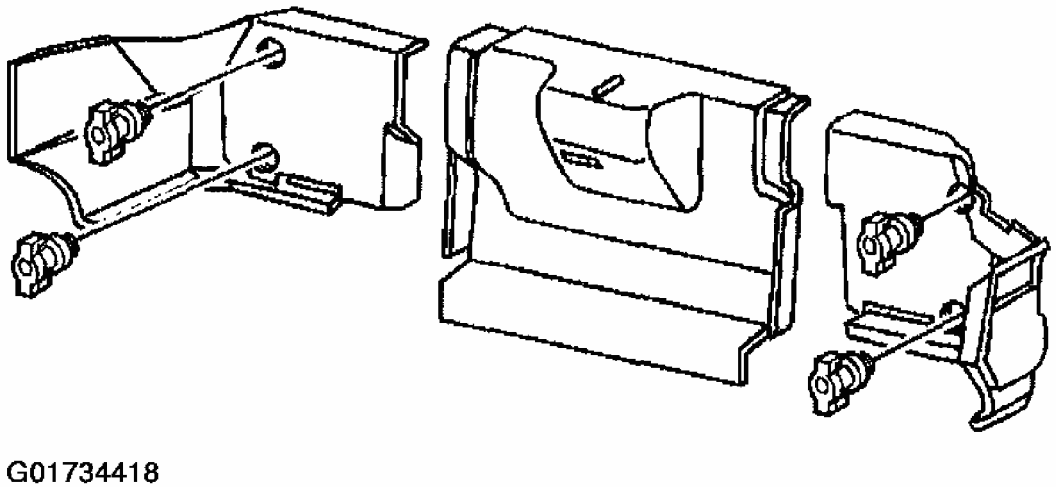

Fig. 95: Installing Cargo Net Attachment Nuts
Courtesy of GENERAL MOTORS CORP.

4. Snap the cargo lamp into the carpet panel, if equipped.

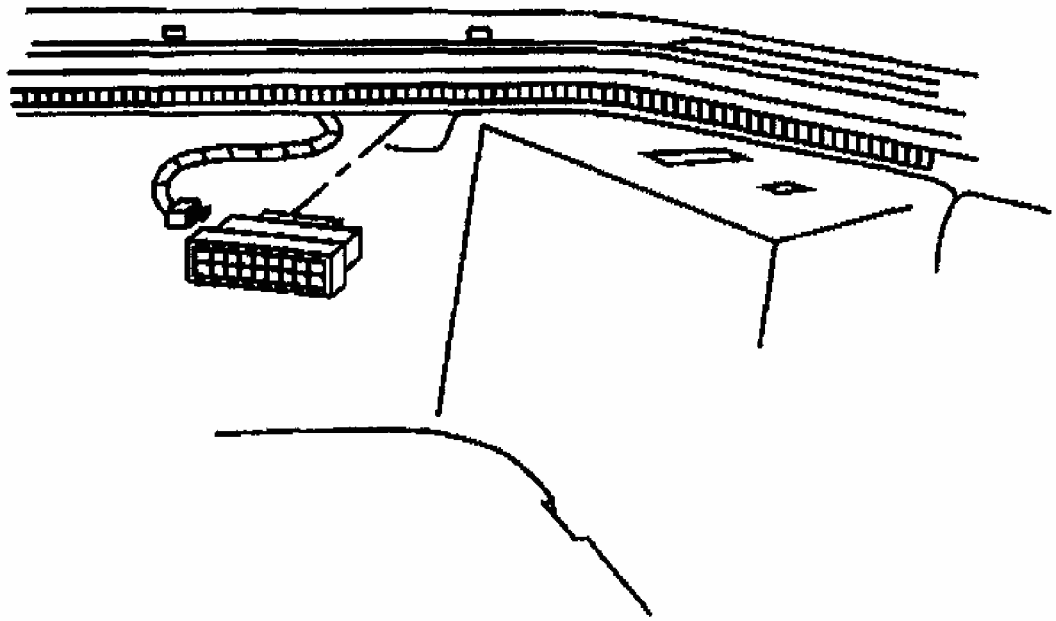

Fig. 96: Installing Cargo Lamp
Courtesy of GENERAL MOTORS CORP.

5. Install the rear floor side stowage compartment cover.

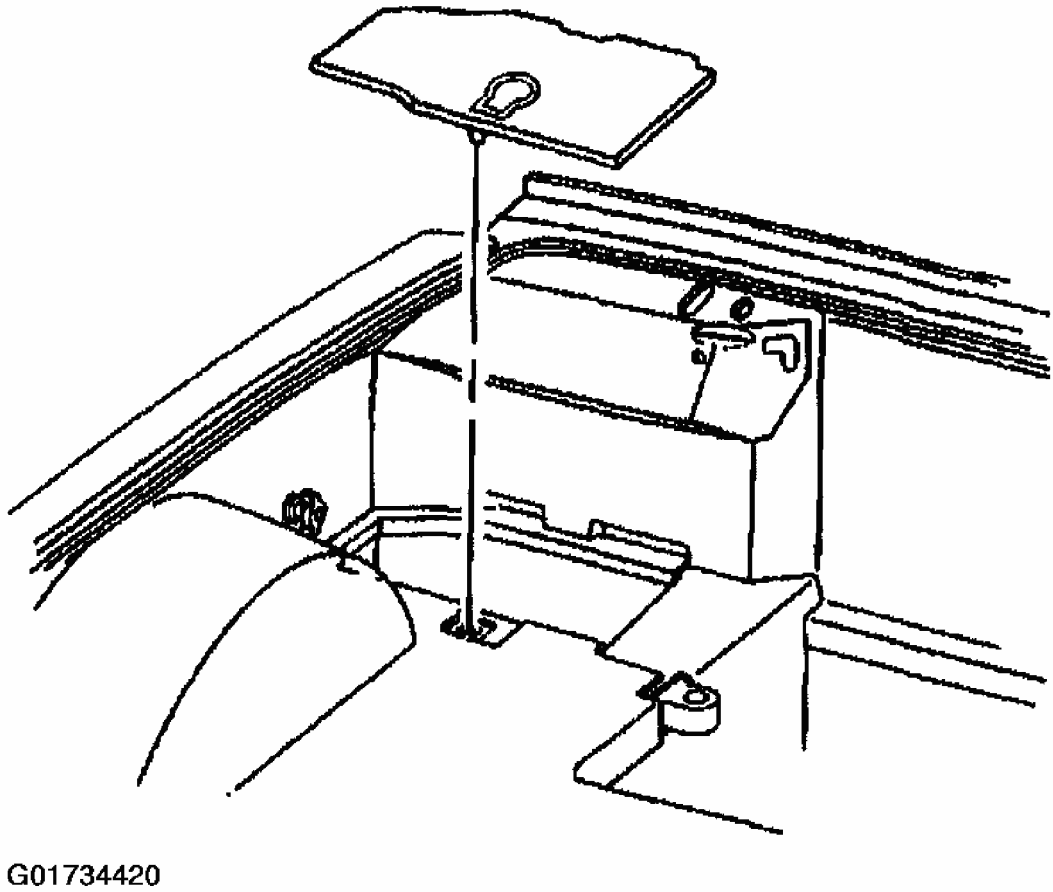

Fig. 97: Installing Rear Floor Side Stowage Compartment Cover
Courtesy of GENERAL MOTORS CORP.

TRIM PANEL CARPET REPLACEMENT - REAR CORNER (HARDTOP)

The hardtop rear corner carpet trim panels are part of the rear center trim panel. Refer to **Trim Panel Carpet - Rear Compartment Rear Center (Convertible)** or **Trim Panel Carpet - Rear Compartment Rear Center (Coupe)** or **Trim Panel Carpet - Rear Compartment Rear Center (Hardtop)** .

TRIM PANEL REPLACE - REAR COMPARTMENT FRONT SIDE (COUPE)

Removal Procedure

1. Open and support the rear lift window.

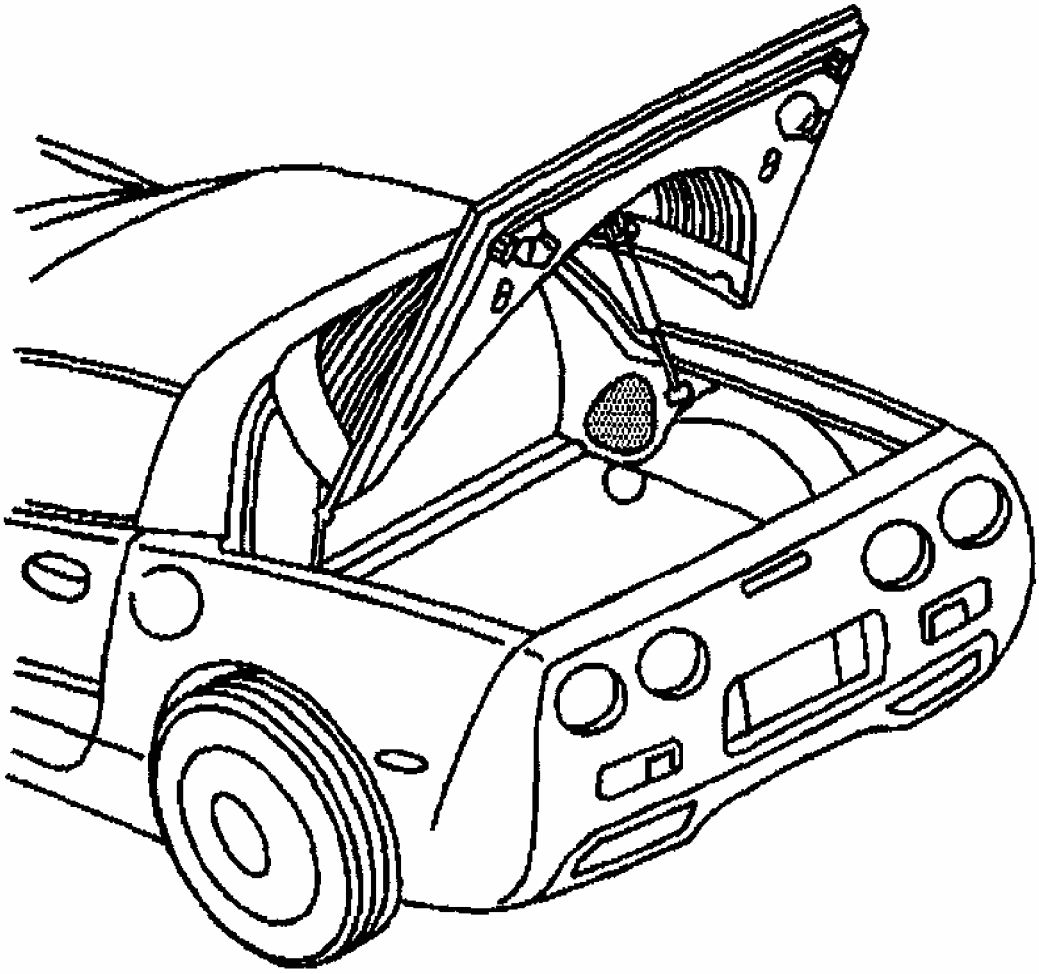

G01734421

Fig. 98: Identifying Rear Lift Window
Courtesy of GENERAL MOTORS CORP.

2. Remove the strut. Refer to **STRUT REPLACEMENT - REAR LIFT WINDOW PANEL** in Body Rear End.

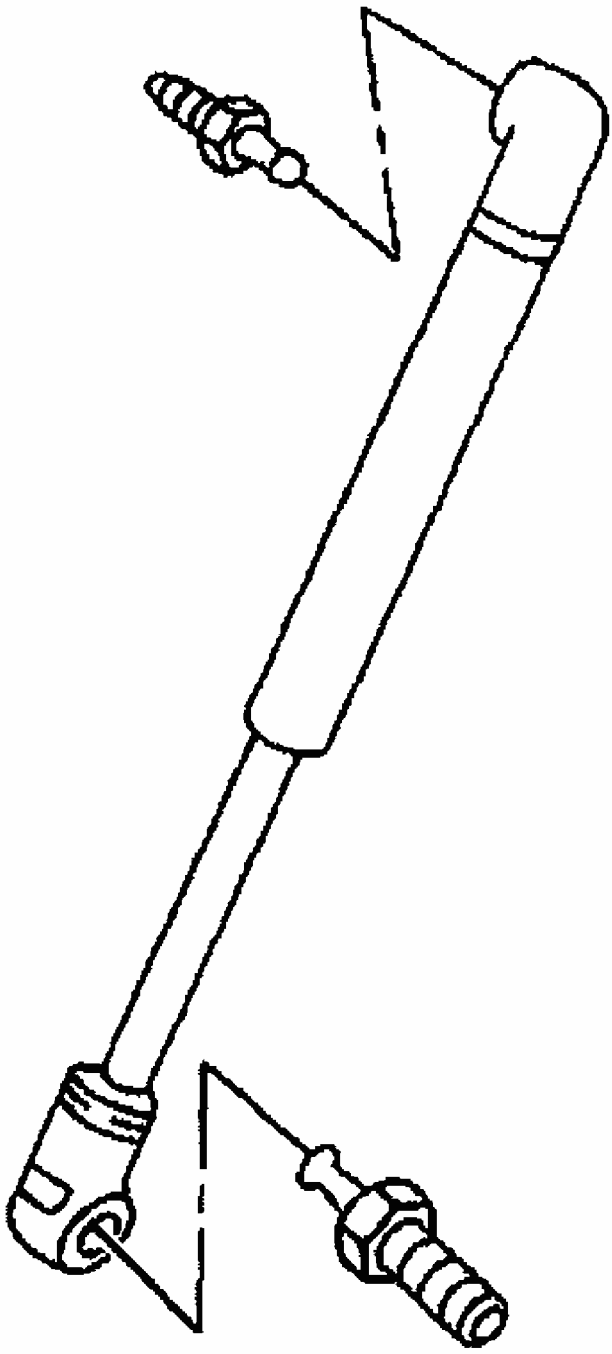

Fig. 99: Removing Rear Lift Window Strut Ball Studs
Courtesy of GENERAL MOTORS CORP.

3. Uncover the upper seat belt guide bolt by pushing up at the belt edge of the bolt cover.
4. Remove the seat belt guide bolt.

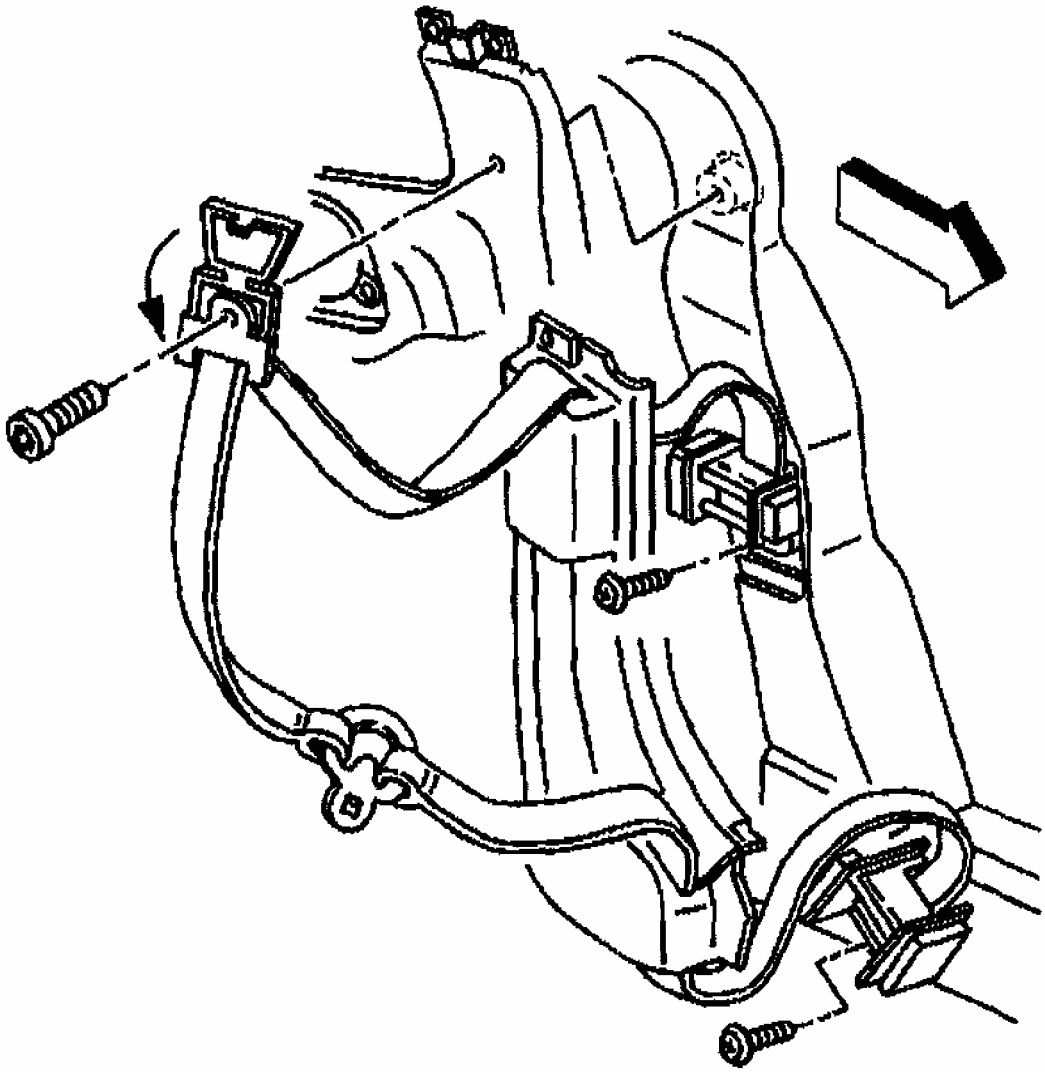

Fig. 100: Removing Upper Seat Belt Guide Bolt
Courtesy of GENERAL MOTORS CORP.

5. Remove the roof lift off panel.
6. Remove the rear roof bow interior trim panel. Refer to **Trim Panel Replacement - Rear Roof Bow** .

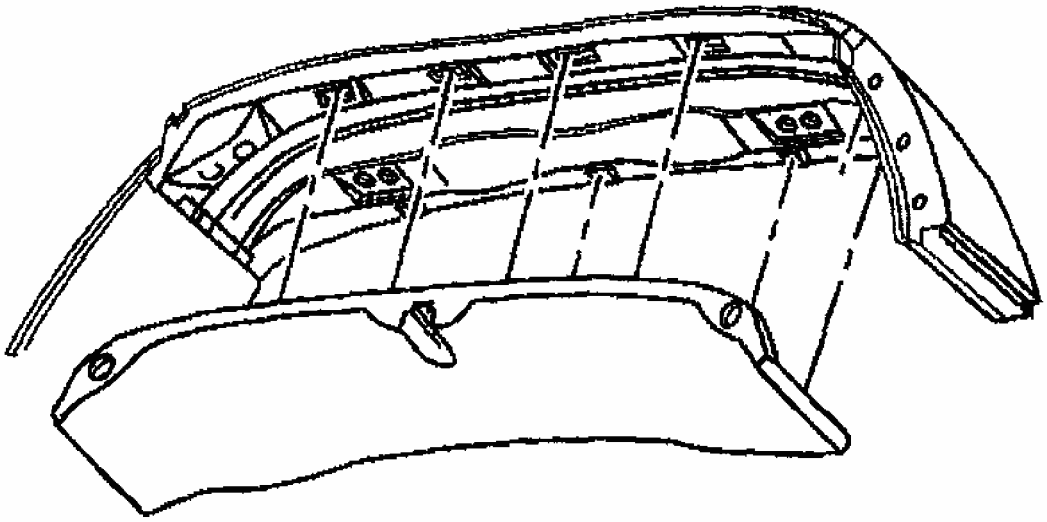

Fig. 101: Removing Rear Roof Bow Interior Trim Panel
Courtesy of GENERAL MOTORS CORP.

7. Remove the fasteners securing the rear roof bow weatherstrip to the lock pillar.

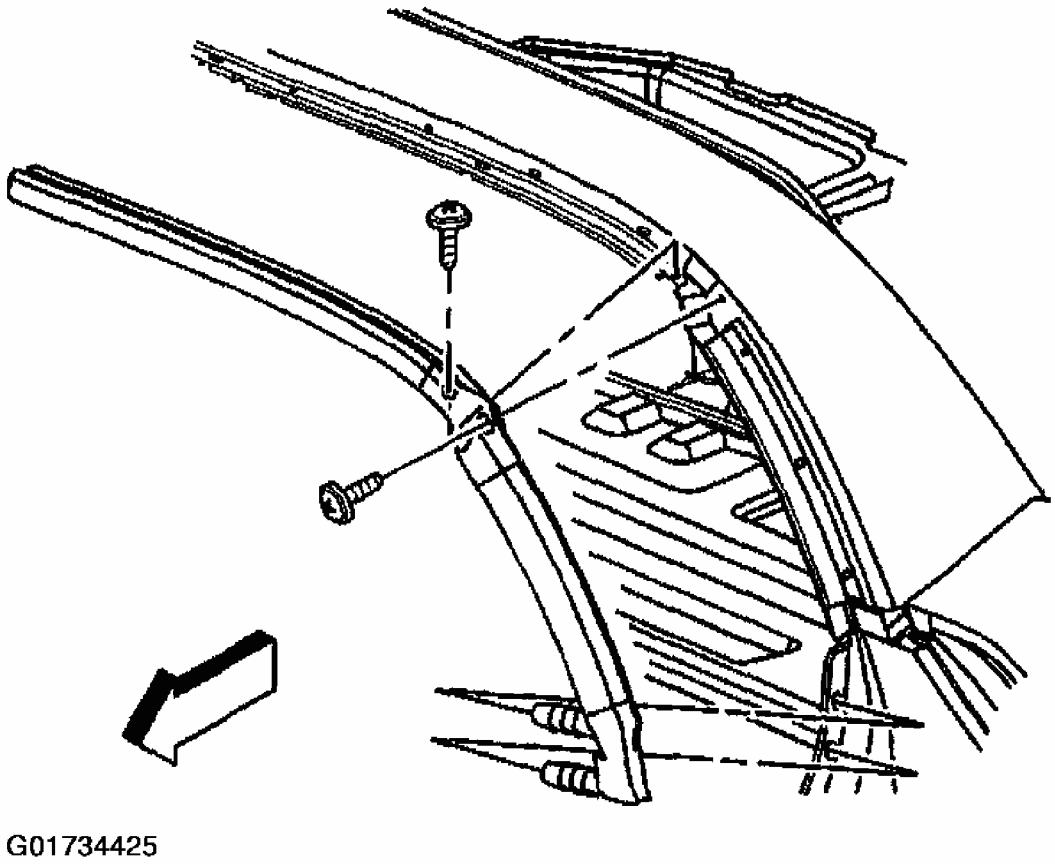

Fig. 102: Removing Rear Roof Bow Weatherstrip Fasteners
Courtesy of GENERAL MOTORS CORP.

8. Remove the push-in fastener securing the top of the side trim panel.
9. Remove the speaker grille from the side trim panel.
   - **9.1.** Pry out the middle of the forward edge first.
   - **9.2.** Pry out the top or the middle of the rear edge.
   - **9.3.** Lift the grille up out of the panel.
10. Remove the fir tree push-in retainer from the rear of the grille opening.
11. Remove the side trim panel.

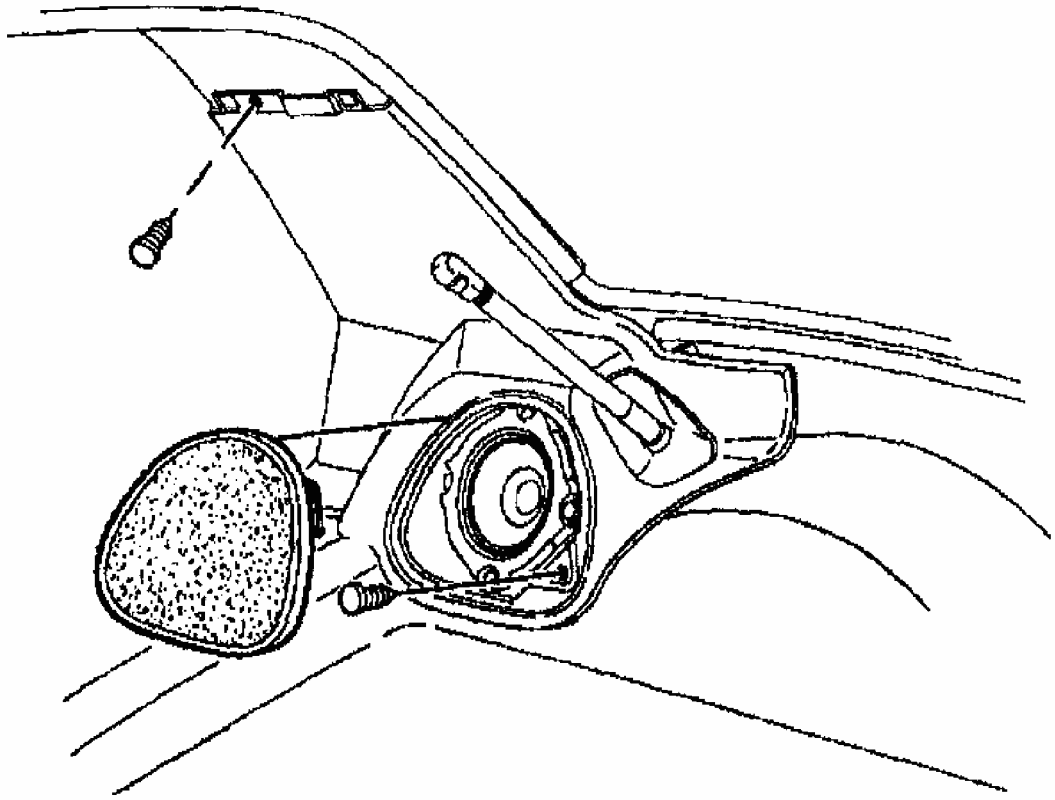

Fig. 103: Removing Side Trim Panel Push-In Retainers
Courtesy of GENERAL MOTORS CORP.

Installation Procedure

1. Position the side trim panel to the lock pillar.
2. Secure the panel with the push-in fastener and hook and loop fasteners.
3. Install the fir tree push-in retainer to the rear of the speaker grill opening.
4. Insert the lower tab of the grille into the opening and snap the grille in place.

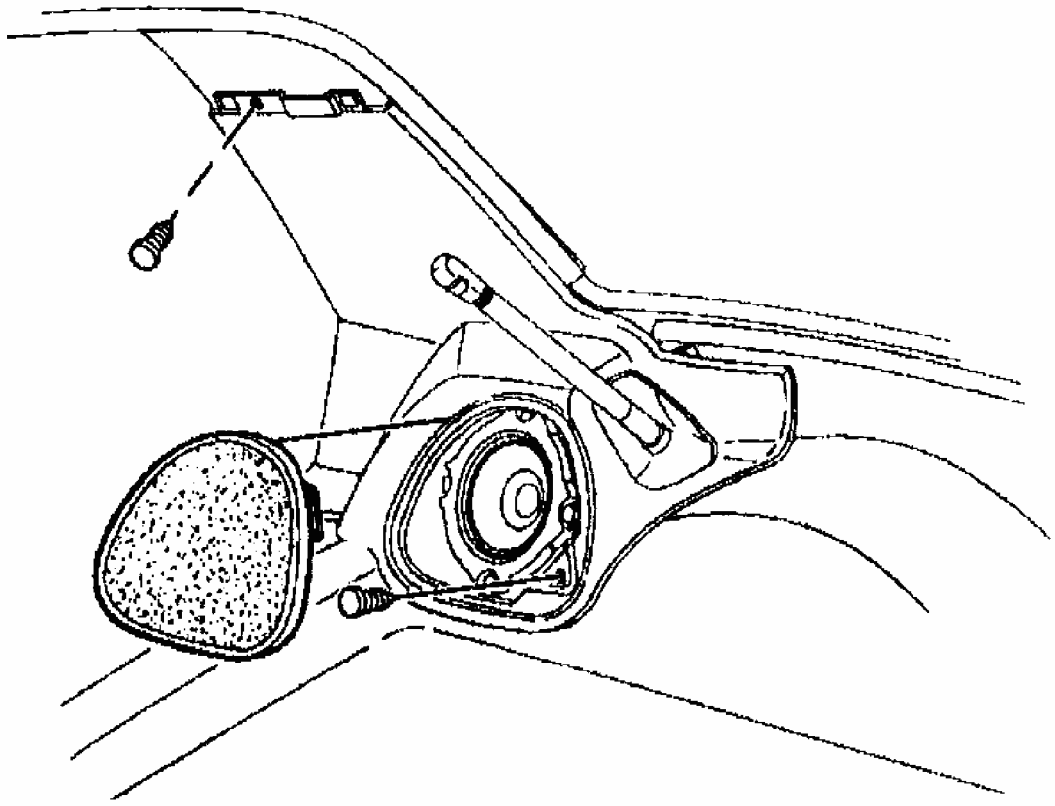

Fig. 104: Installing Side Trim Panel Push-In Retainers
Courtesy of GENERAL MOTORS CORP.

CAUTION: Refer to FASTENER NOTICE .

5. Install the seat belt guide bolt and cover.

Tighten

Tighten the seat belt guide bolt to 46 N.m (34 lb ft).

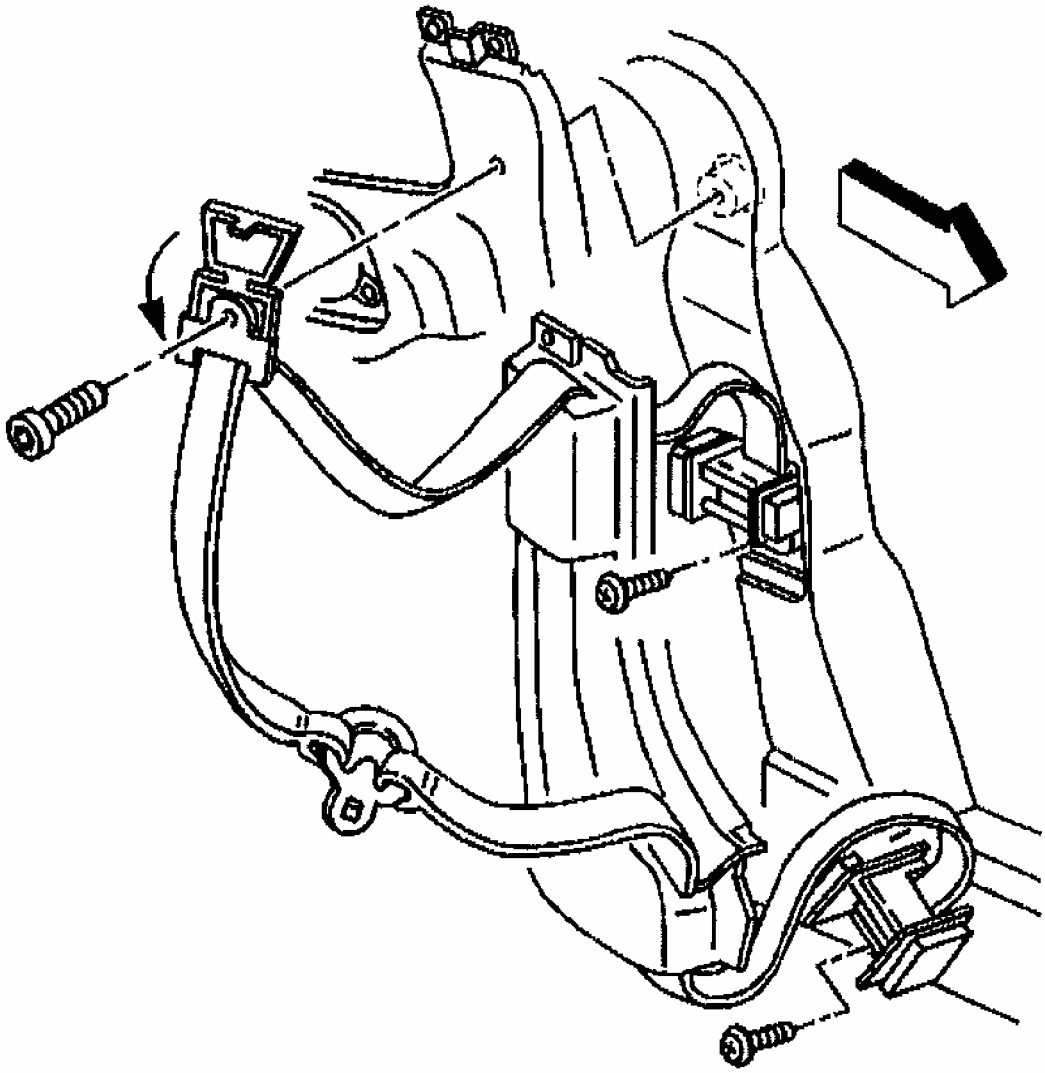

Fig. 105: Installing Upper Seat Belt Guide Bolt
Courtesy of GENERAL MOTORS CORP.

6. Install the strut. Refer to **STRUT REPLACEMENT - REAR LIFT WINDOW PANEL** . in Body Rear End.

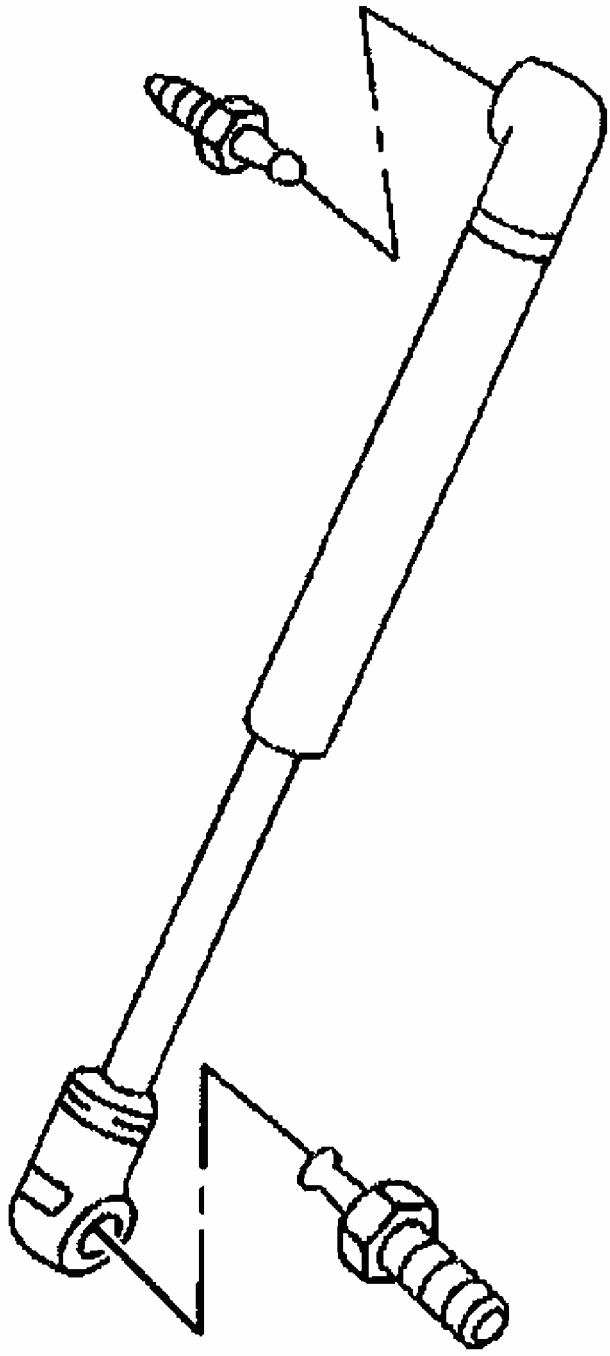

Fig. 106: Installing Rear Lift Window Strut Ball Studs
Courtesy of GENERAL MOTORS CORP.

7. Install the push-in fasteners attaching the weatherstrip to the lock pillar.

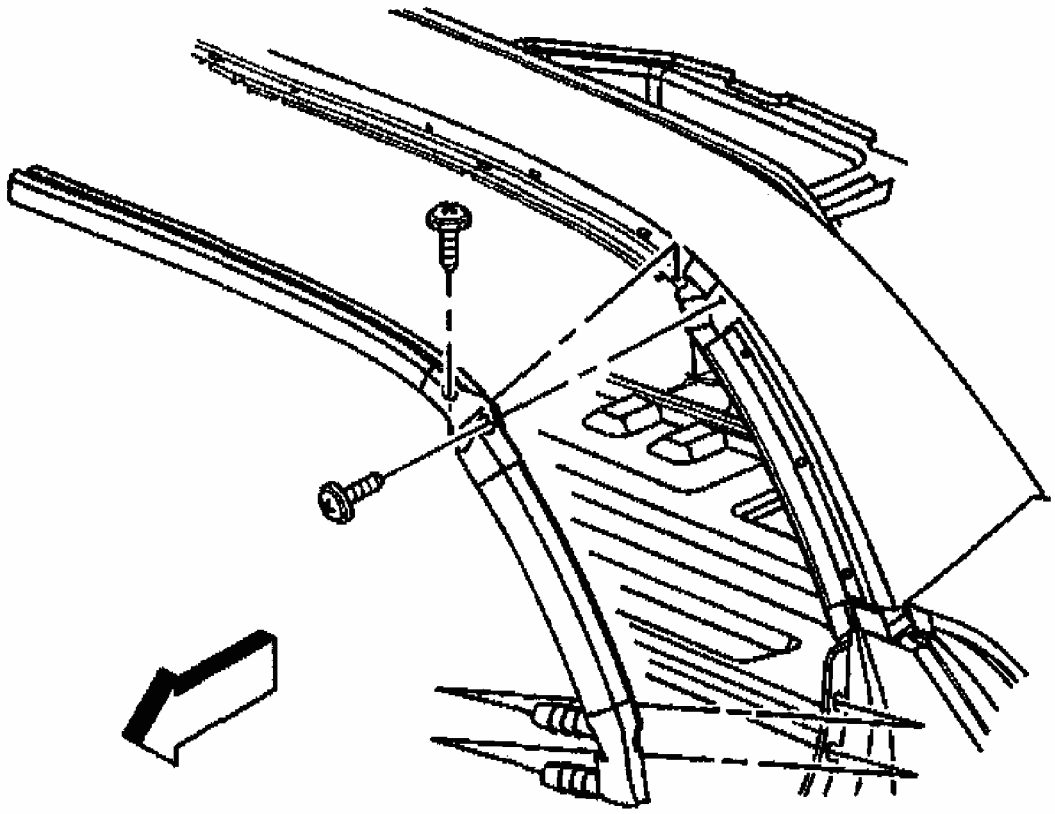

Fig. 107: Installing Rear Roof Bow Weatherstrip Fasteners
Courtesy of GENERAL MOTORS CORP.

8. Install the rear roof bow interior trim panel and the roof lift off panel. Refer to **Trim Panel Replacement - Rear Roof Bow** .
9. Remove the support and close the lift window.

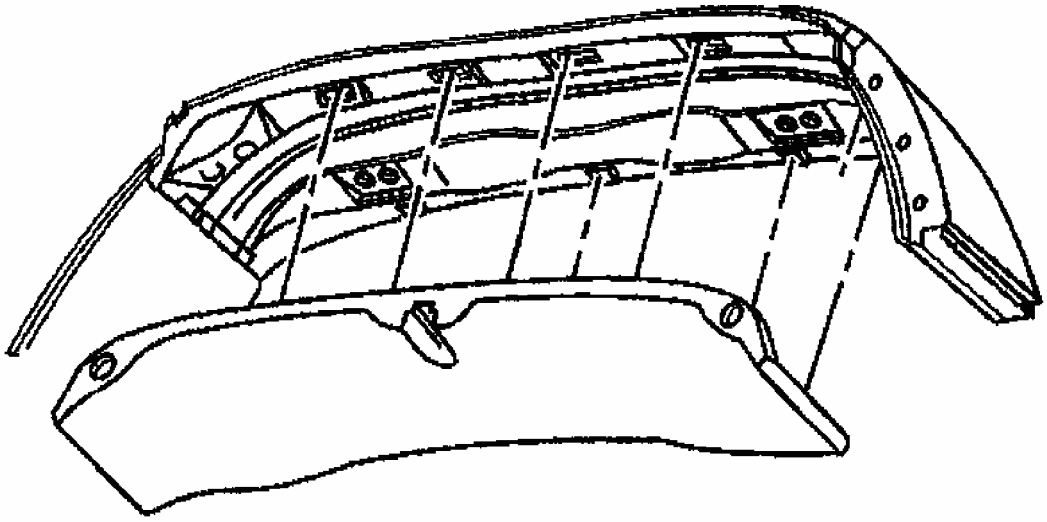

G01734431

Fig. 108: Installing Rear Roof Bow Interior Trim Panel
Courtesy of GENERAL MOTORS CORP.

TRIM PANEL REPLACE - REAR COMPARTMENT FRONT SIDE (CONVERTIBLE)

Removal Procedure

1. Open the folding top stowage lid.
2. Remove the push pin from the front of the side trim panel.
3. Pull the panel from the housing.

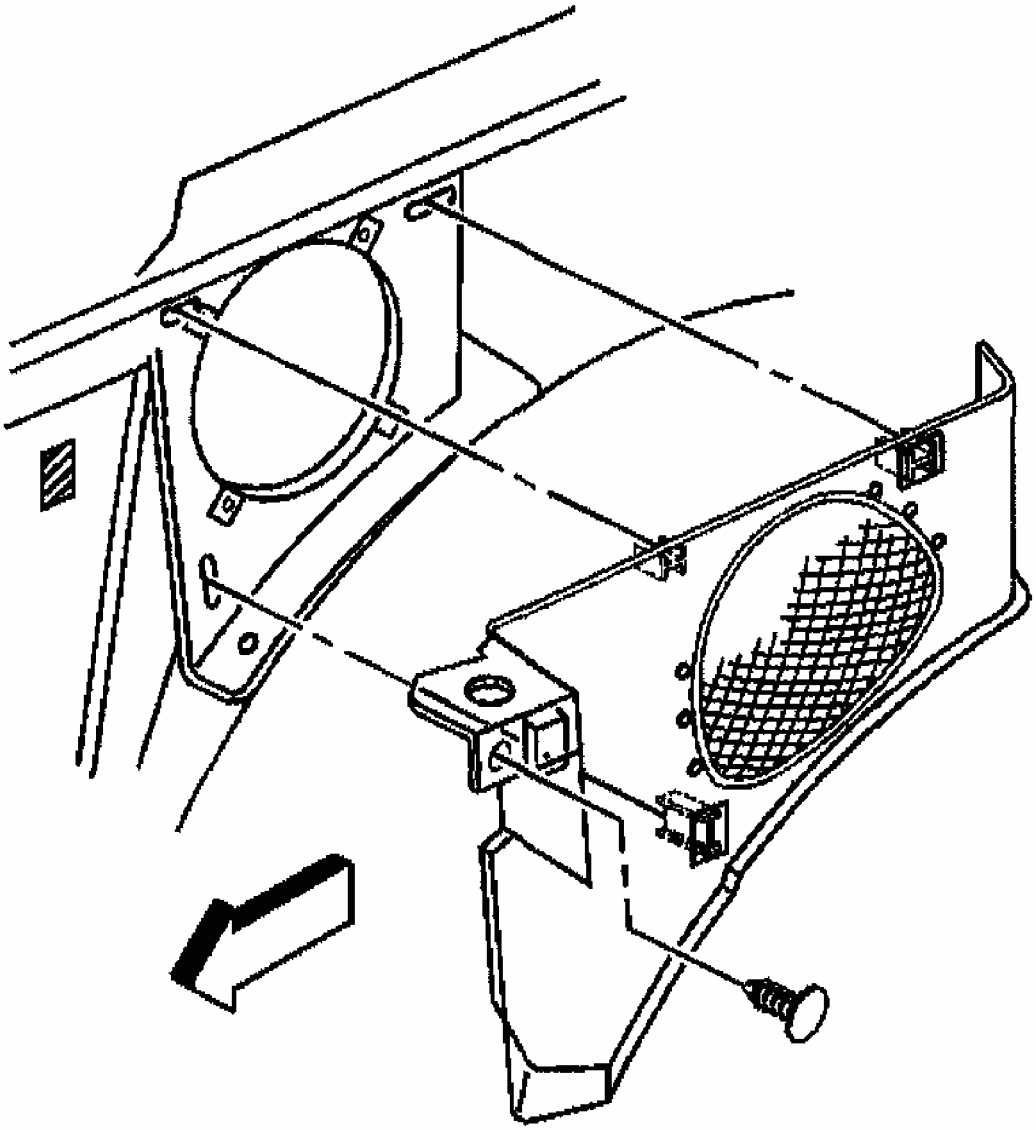

Fig. 109: Removing Side Trim Panel Push Pin
Courtesy of GENERAL MOTORS CORP.

Installation Procedure

1. Position the side trim panel with the front edge of the panel under the lock pillar flange.
2. Install the push pin attaching the panel to the lock pillar.
3. Align the panel clips to the holes in the housing.
4. Press the panel at the clip locations to secure the clips.

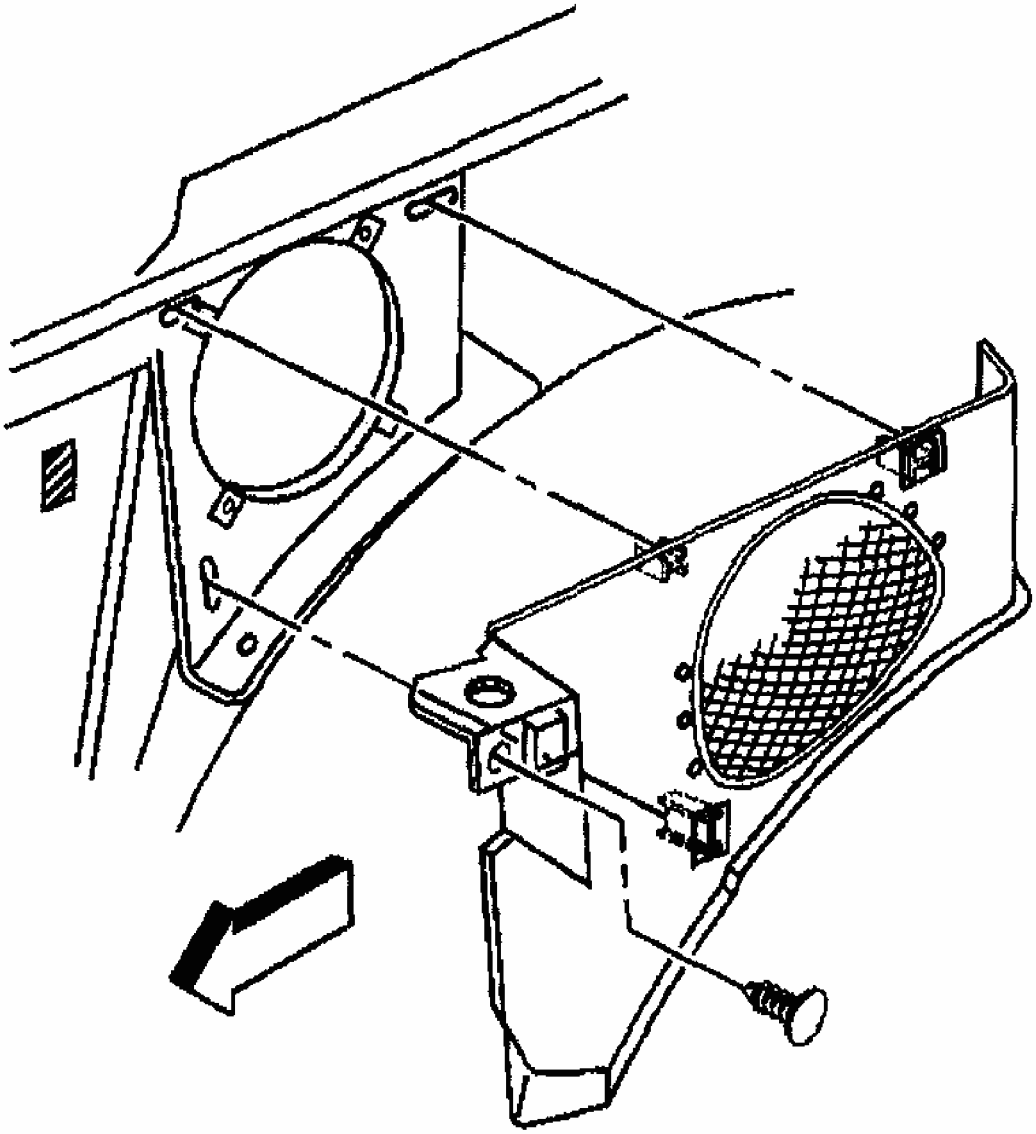

Fig. 110: Installing Side Trim Panel Push Pin
Courtesy of GENERAL MOTORS CORP.

TRIM PANEL REPLACE - REAR COMPARTMENT FRONT SIDE (HARDTOP)

Removal Procedure

1. Remove the push pins from the ends of the lower garnish molding.
2. Pull the molding with the molding retainers from the body panel.
3. Remove the rear window lower garnish molding.

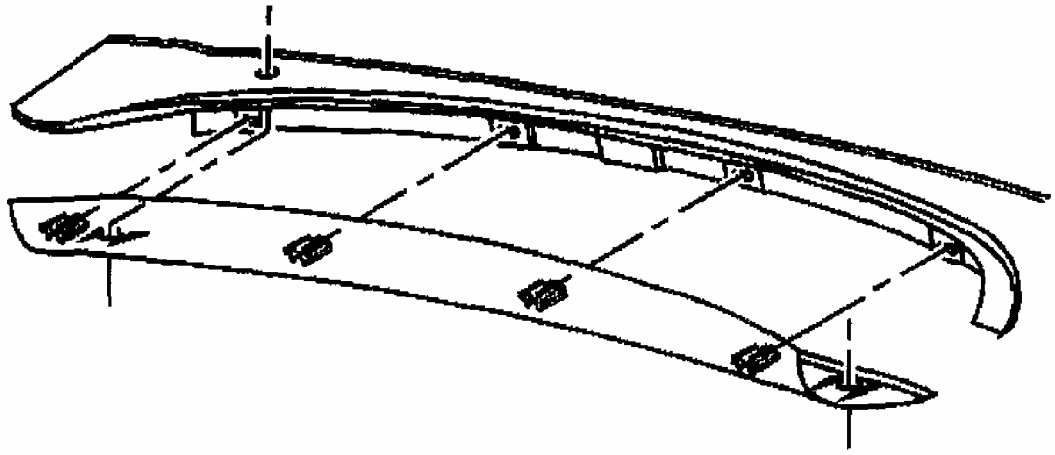

G01734434

Fig. 111: Removing Rear Window Lower Garnish Molding Push Pins
Courtesy of GENERAL MOTORS CORP.

4. Remove the support trim panel from rear compartment front support.

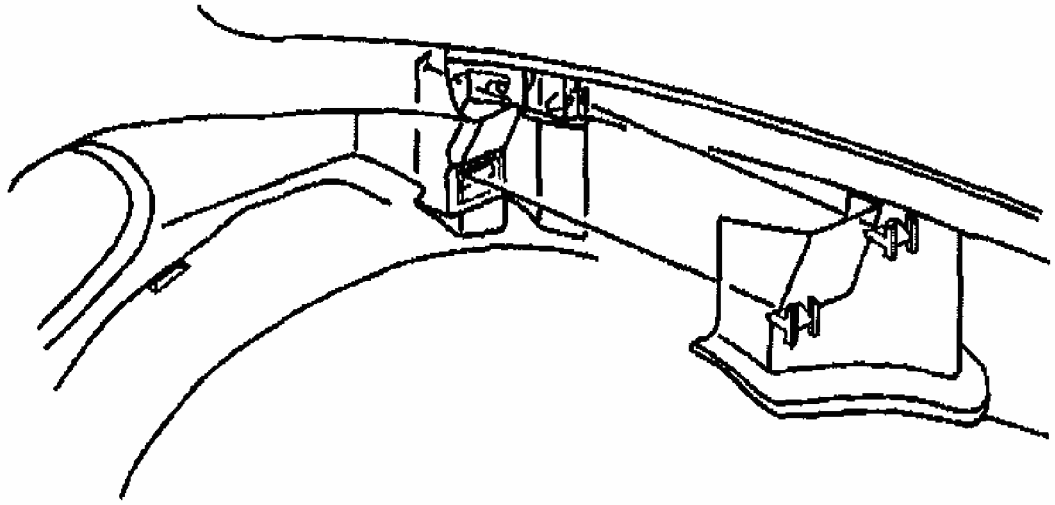

G01734435

Fig. 112: Removing Rear Compartment Support Trim Panel
Courtesy of GENERAL MOTORS CORP.

5. Uncover the seat belt upper guide bolt by pushing up at the belt edge of the cover and flipping up the cover.

6. Remove the seat belt upper guide bolt.

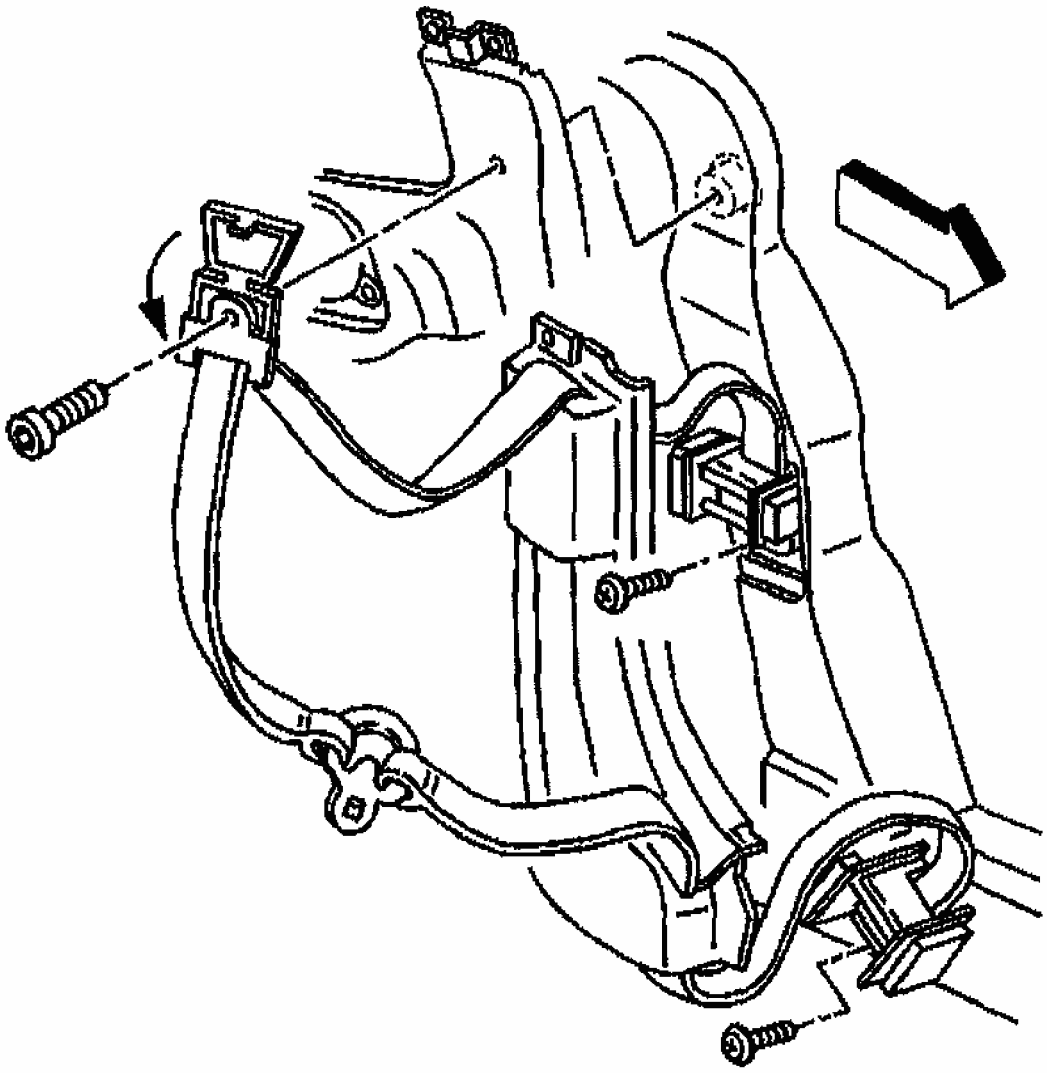

Fig. 113: Removing Upper Seat Belt Guide Bolt
Courtesy of GENERAL MOTORS CORP.

7. Remove the push-in retainer attaching the side trim panel to the rear compartment front support.
8. Pull the side trim panel from the rear side of the roof.
9. Pull the side trim panel from the roof bow.
10. Pull the side trim panel from the lock pillar.

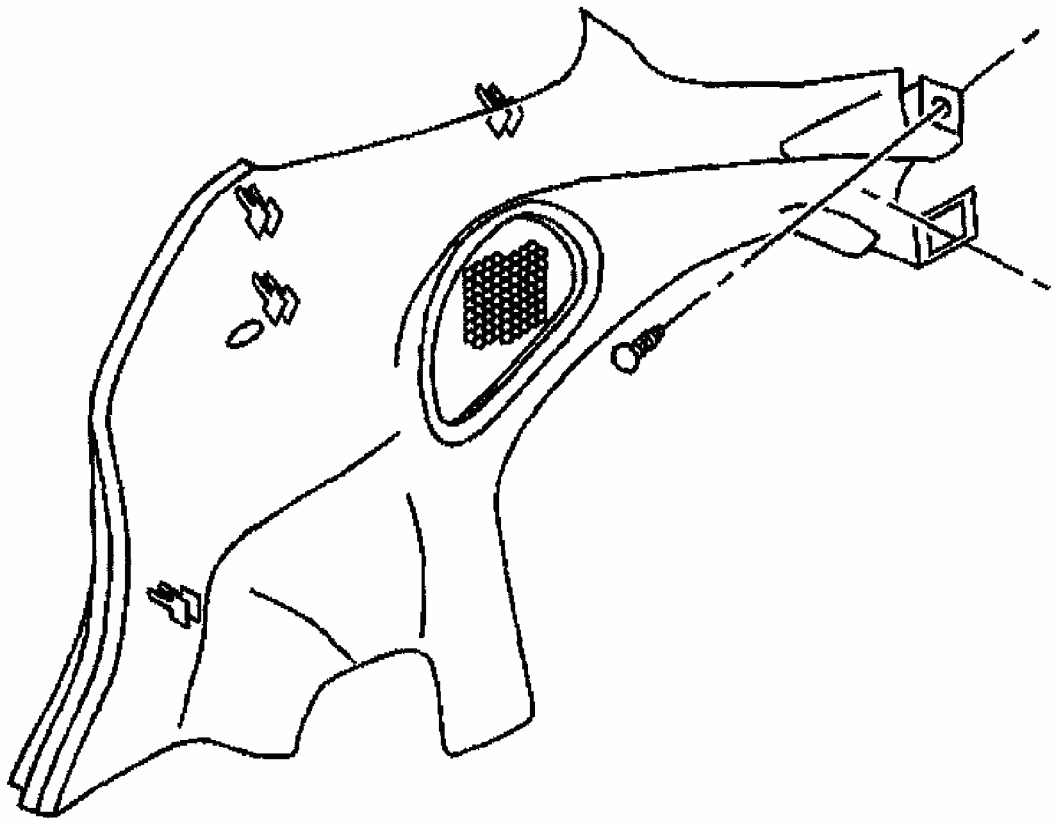

Fig. 114: Removing Side Trim Panel Push-In Retainer
Courtesy of GENERAL MOTORS CORP.

Installation Procedure

1. Position the side trim panel to the vehicle.
2. Secure the panel to the roof bow.
3. Secure the side trim panel to the lock pillar.
4. Secure the side trim panel to the rear compartment support with a push-in retainer.
5. Secure the side trim panel to the side of the roof.

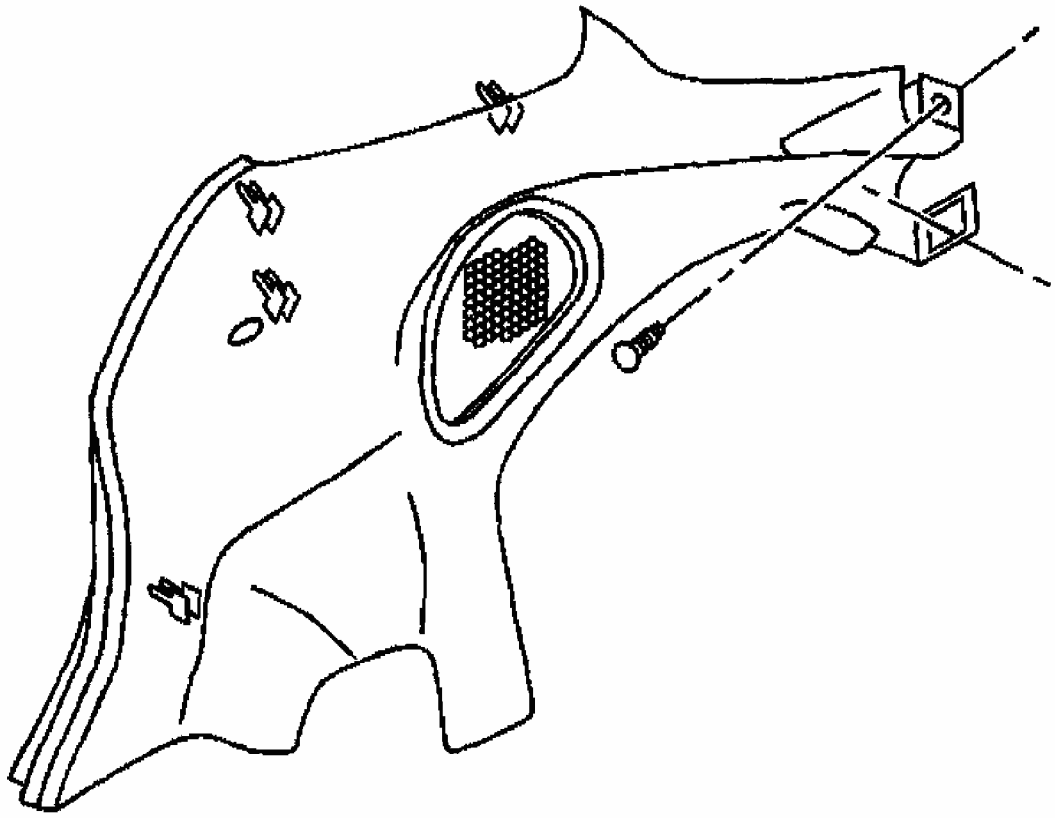

G01734438

Fig. 115: Installing Side Trim Panel Push-In Retainer
Courtesy of GENERAL MOTORS CORP.

CAUTION: Refer to FASTENER NOTICE .

6. Install the seat belt upper guide bolt and cover.

   Tighten

   Tighten the seat belt guide bolt to 41 N.m (31 lb ft).

7. Snap the cover closed.

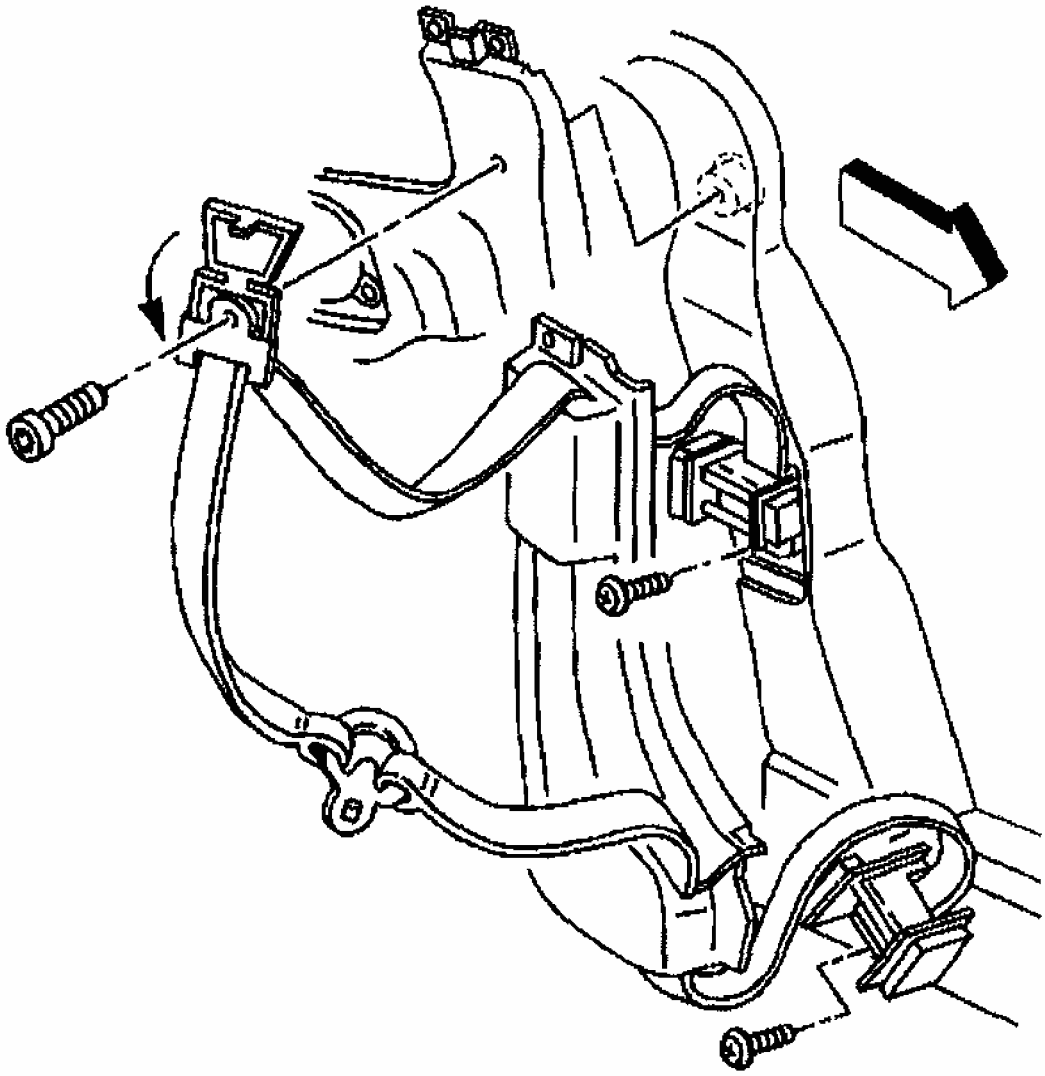

Fig. 116: Installing Upper Seat Belt Guide Bolt
Courtesy of GENERAL MOTORS CORP.

8. Install the rear compartment support trim panel.

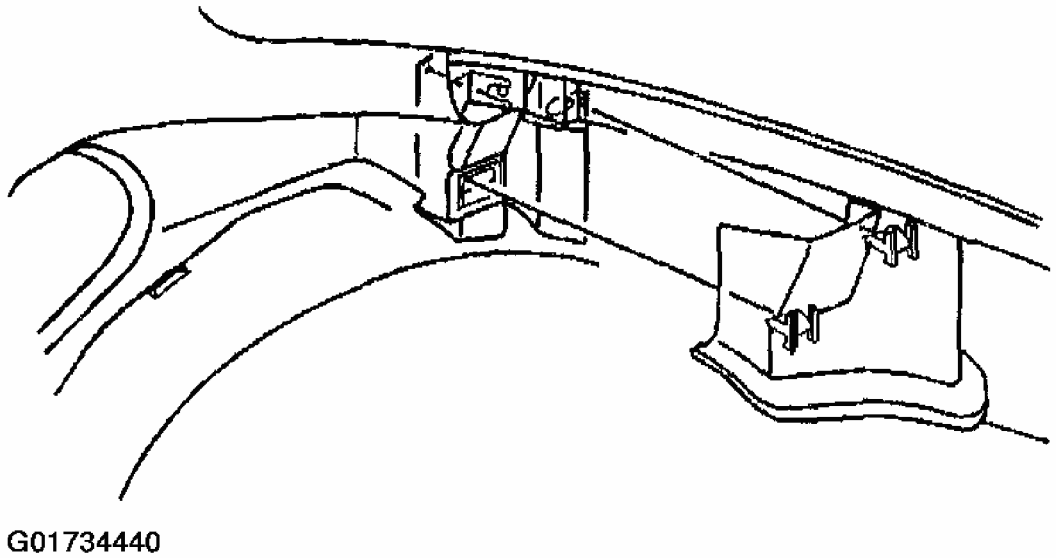

Fig. 117: Installing Rear Compartment Support Trim Panel
Courtesy of GENERAL MOTORS CORP.

9. Align the rear window lower garnish molding retainers to the holes in the roof panel.
10. Push firmly on the garnish molding seating the retainers.
11. Install the push pins securing the ends of the garnish molding.

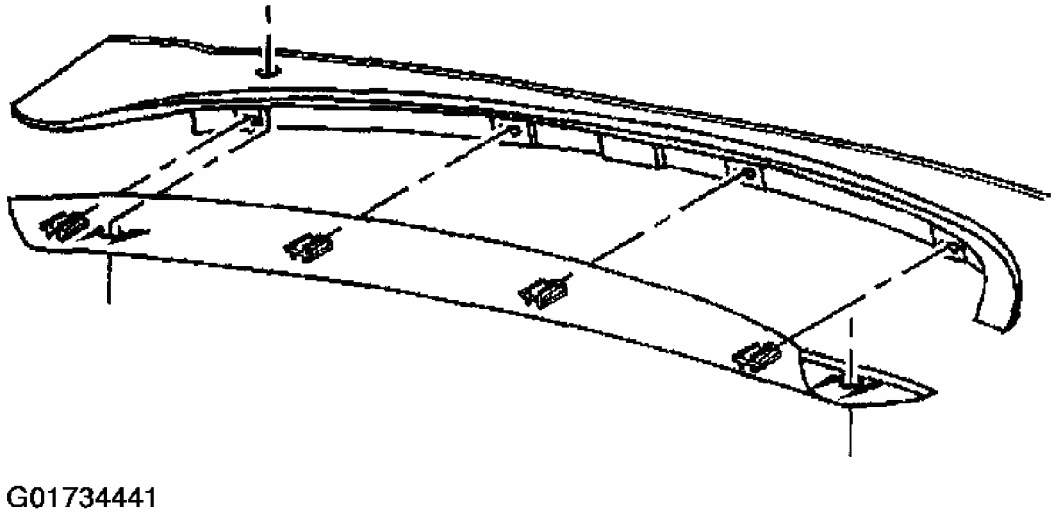

Fig. 118: Installing Rear Window Lower Garnish Molding Push Pins
Courtesy of GENERAL MOTORS CORP.

MOUNTING PLATE - ROOF LIFT OFF PANEL FRONT STOWAGE

Removal Procedure

1. Remove the roof front stowage bracket by twisting the egg shaped bracket 90 degrees clockwise.
2. Remove the bezel from the roof front stowage bracket mounting plate by prying up the bezel.

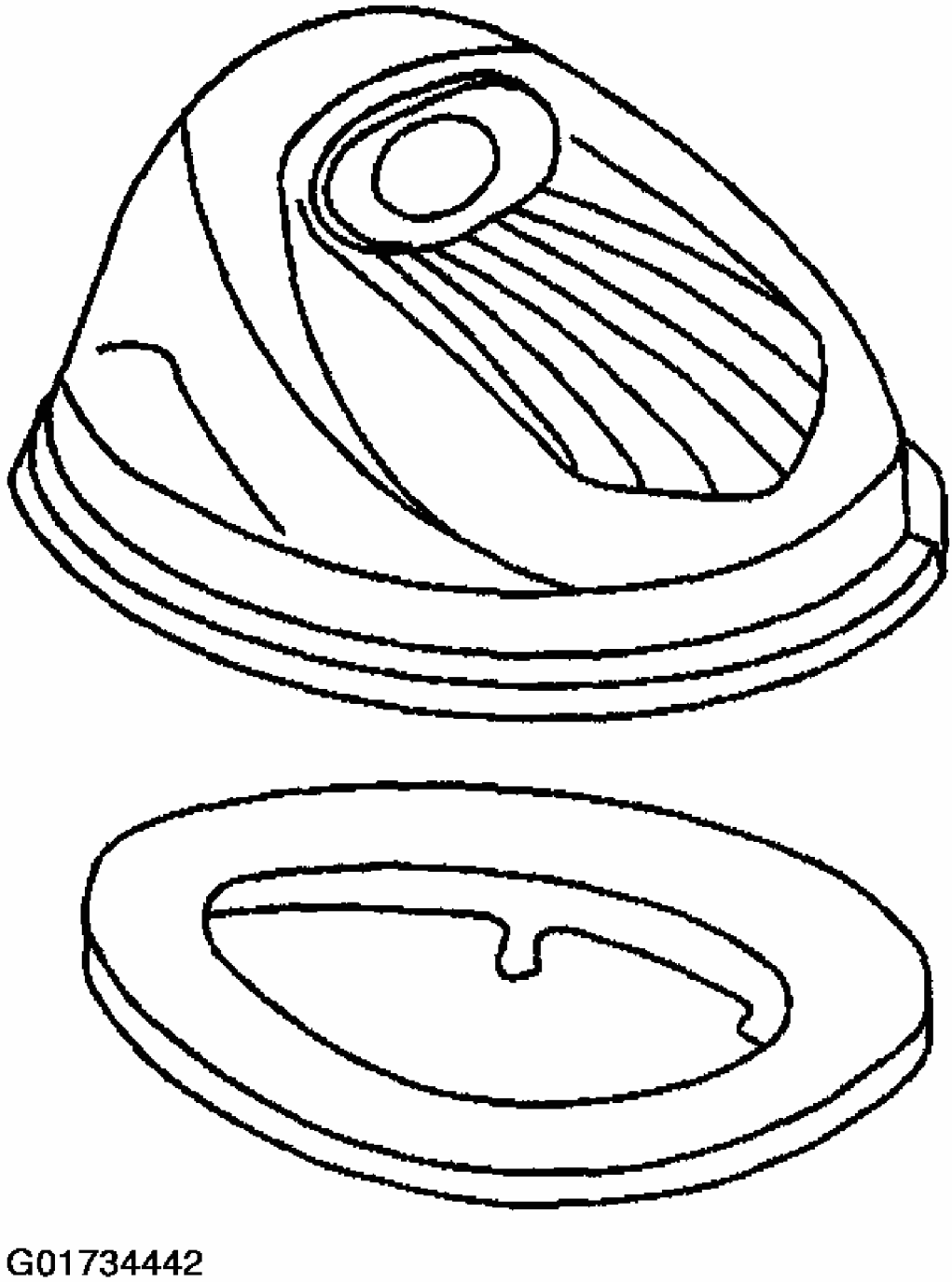

Fig. 119: Removing Roof Front Stowage Bracket & Bezel
Courtesy of GENERAL MOTORS CORP.

3. Remove the floor carpet to access the mounting plate bolts. Refer to **Carpet Replacement - Rear Compartment Floor (Convertible)** or **Carpet Replacement -**

Rear Compartment Floor (Coupe) or **Carpet Replacement - Rear Compartment Floor (Hardtop)** .

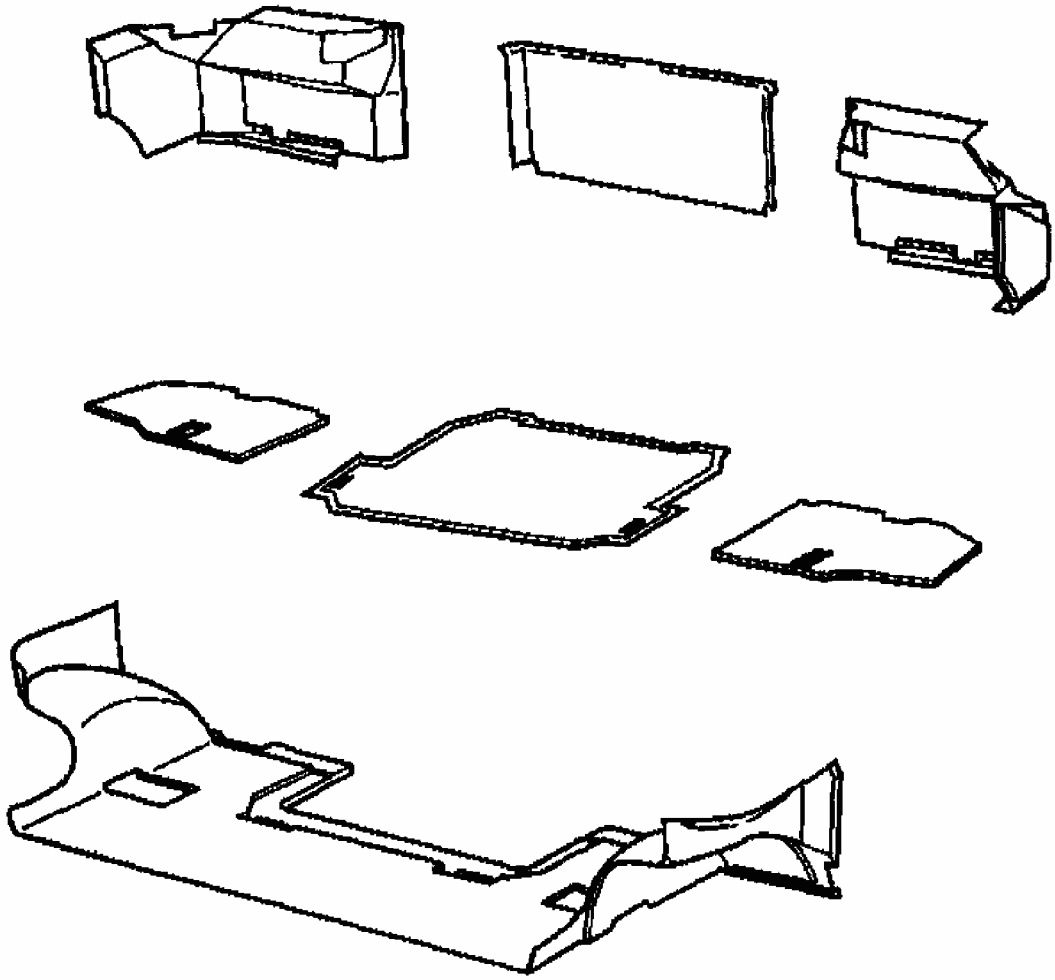

Fig. 120: Identifying Rear Compartment Carpet
Courtesy of GENERAL MOTORS CORP.

4. Remove the bolts attaching the roof front stowage bracket mounting plate.

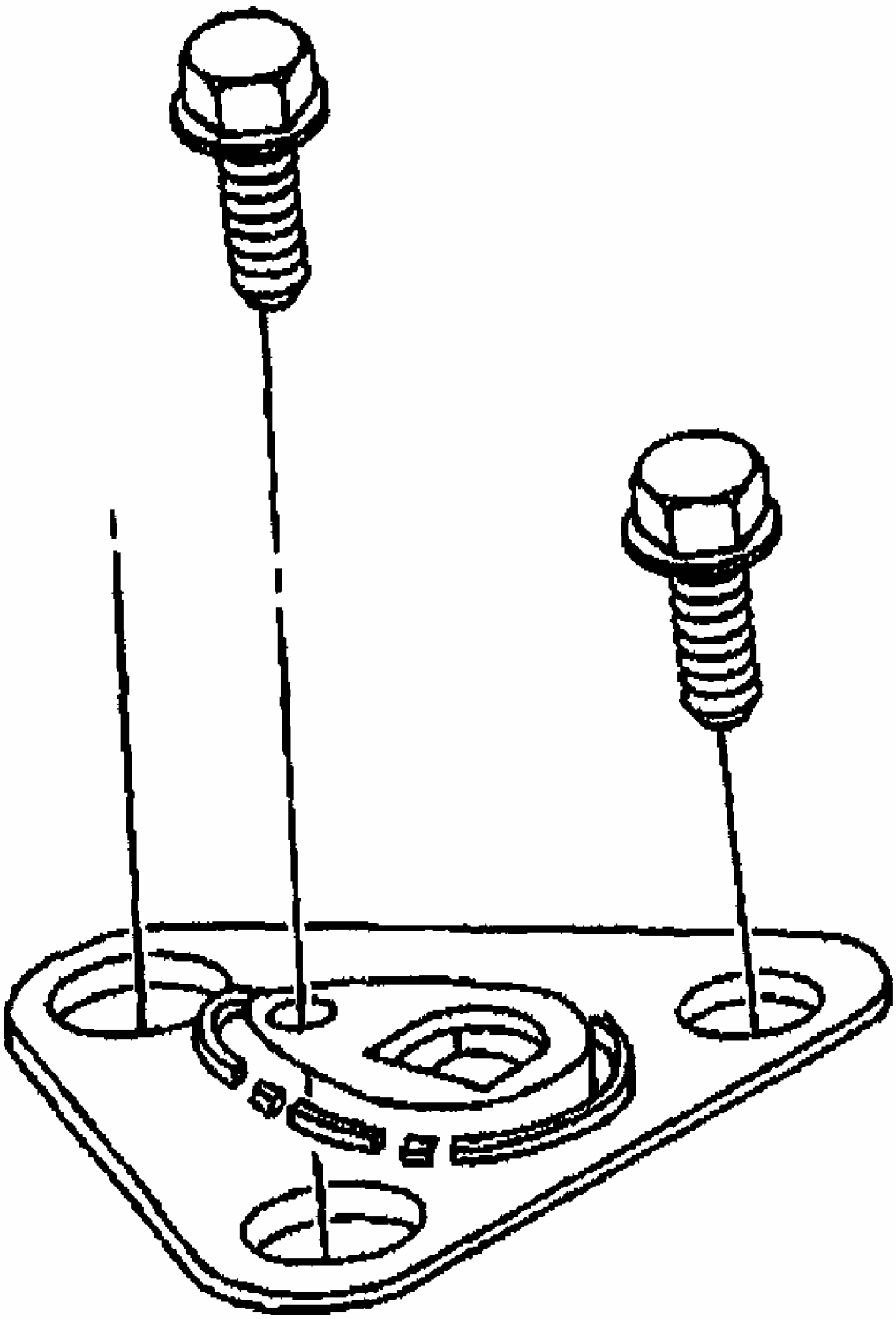

G01734444

Fig. 121: Removing Roof Front Stowage Bracket Mounting Plate Bolts
Courtesy of GENERAL MOTORS CORP.

5. Remove the roof front stowage bracket mounting plate.

Installation Procedure

1. Position the mounting plate to the rear compartment floor.

CAUTION: Refer to FASTENER NOTICE .

2.1. Install the bolts attaching the mounting plate.
2.2. Install the rear inboard bolt first.
2.3. Install the rear outboard bolt second.

2. Install the forward bolt third.

Tighten

Tighten the roof stowage bracket mounting plate bolts to 8 N.m (71 lb in).

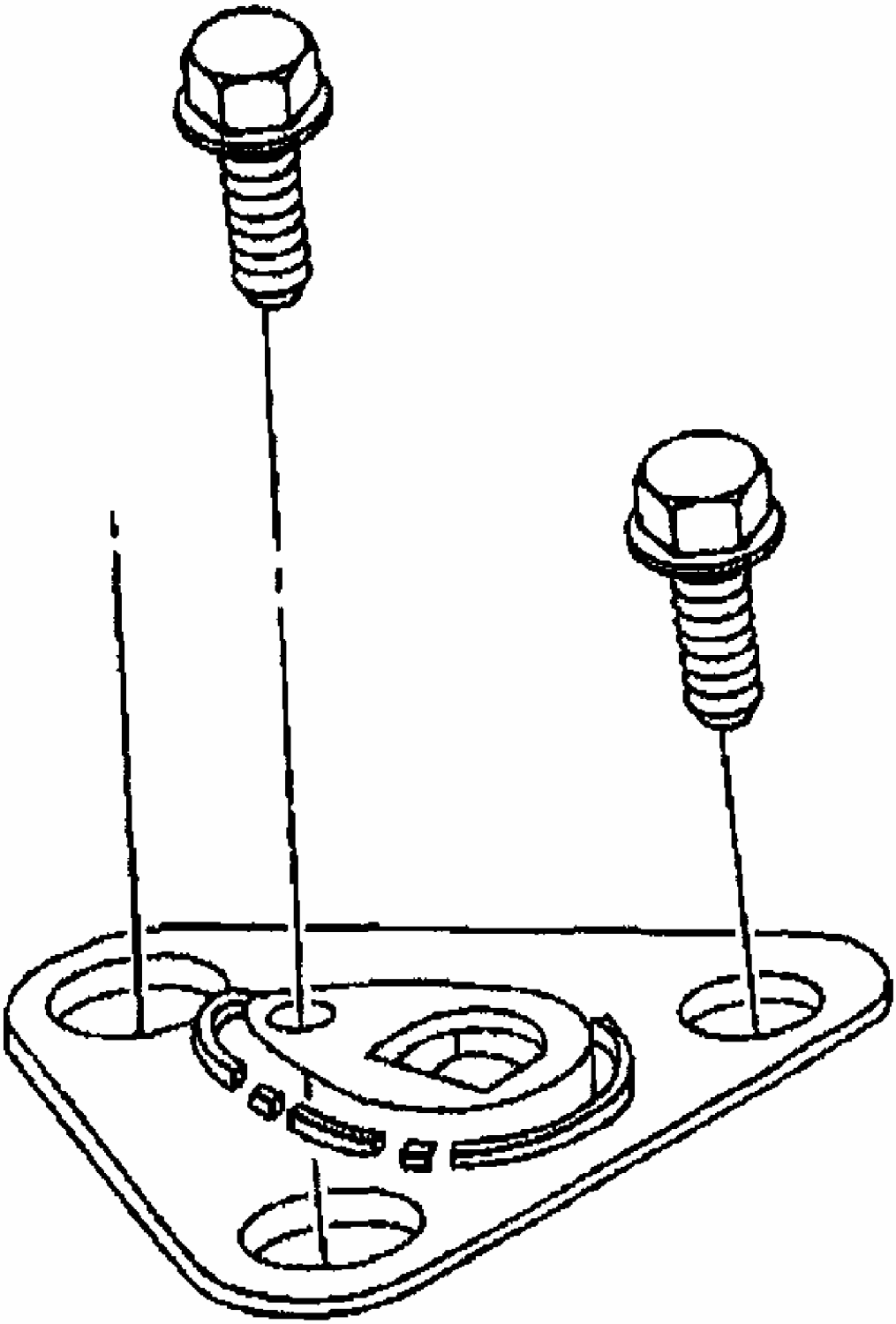

G01734445

Fig. 122: Installing Roof Front Stowage Bracket Mounting Plate Bolts
Courtesy of GENERAL MOTORS CORP.

3. Install the floor carpeting. Refer to **Carpet Replacement - Rear Compartment Floor (Convertible)** or **Carpet Replacement - Rear Compartment Floor (Coupe)** or **Carpet Replacement - Rear Compartment Floor (Hardtop)** .

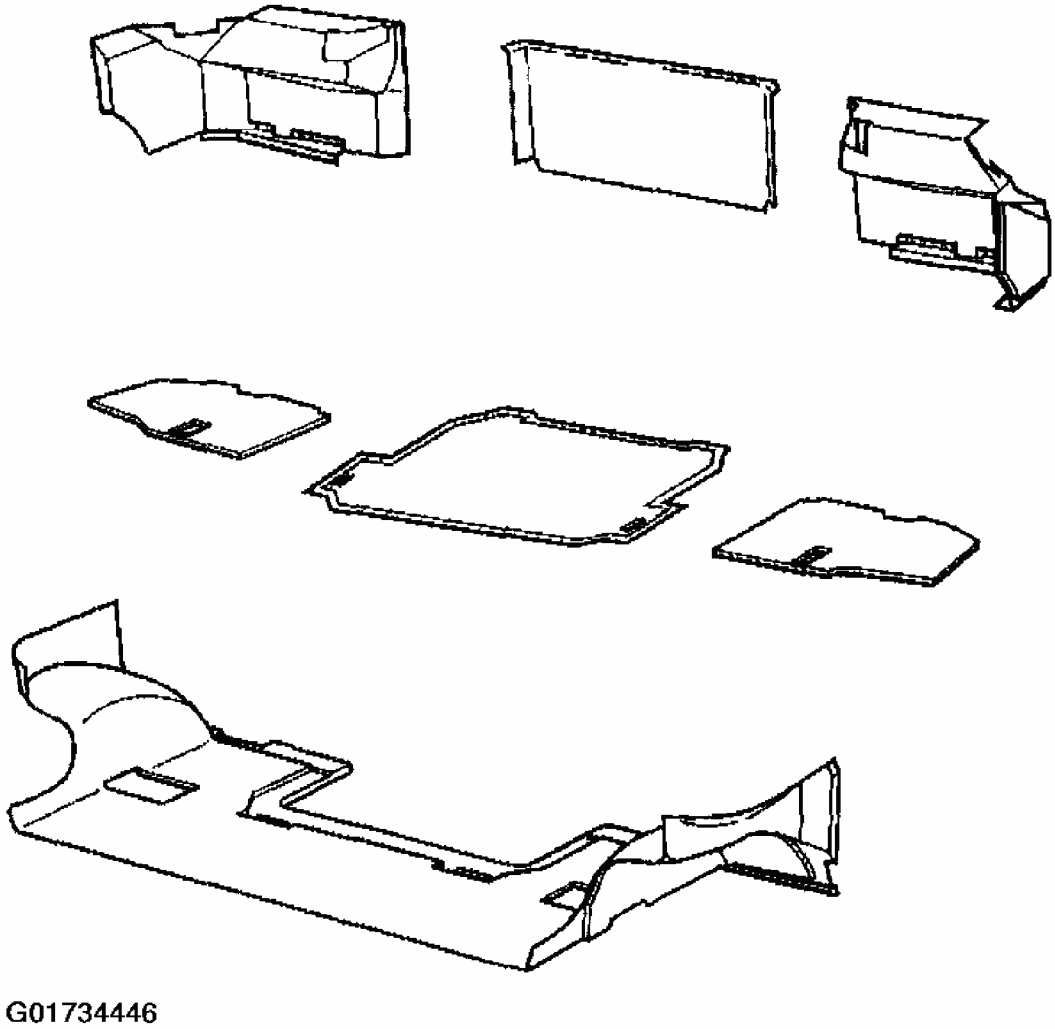

Fig. 123: Identifying Rear Compartment Carpet
Courtesy of GENERAL MOTORS CORP.

4. Snap the bezel onto the ribs on the mounting plate. Press firmly around the entire periphery of the bezel.
5. Install the stowage bracket. Rotate the egg shaped bracket 90 degrees counterclockwise to secure the bracket.

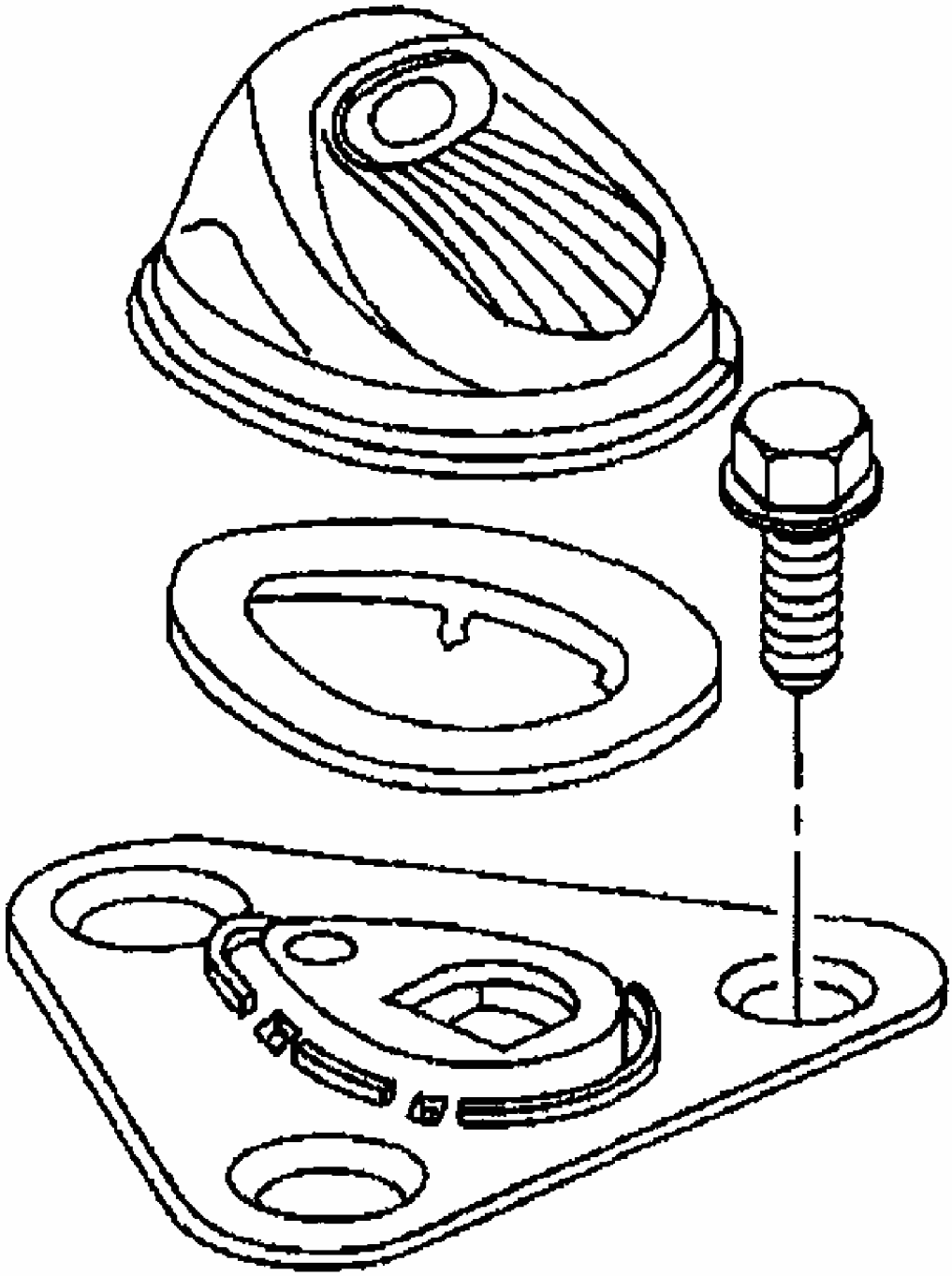

Fig. 124: Installing Roof Front Stowage Bezel & Bracket
Courtesy of GENERAL MOTORS CORP.

FOLDING TOP HEADLINER REPLACEMENT

Removal Procedure

1. Position the folding top with the #1 and #5 bow up.
2. Remove the seal compression panel. Refer to **FOLDING TOP SEAL COMPRESSION PANEL REPLACEMENT** .

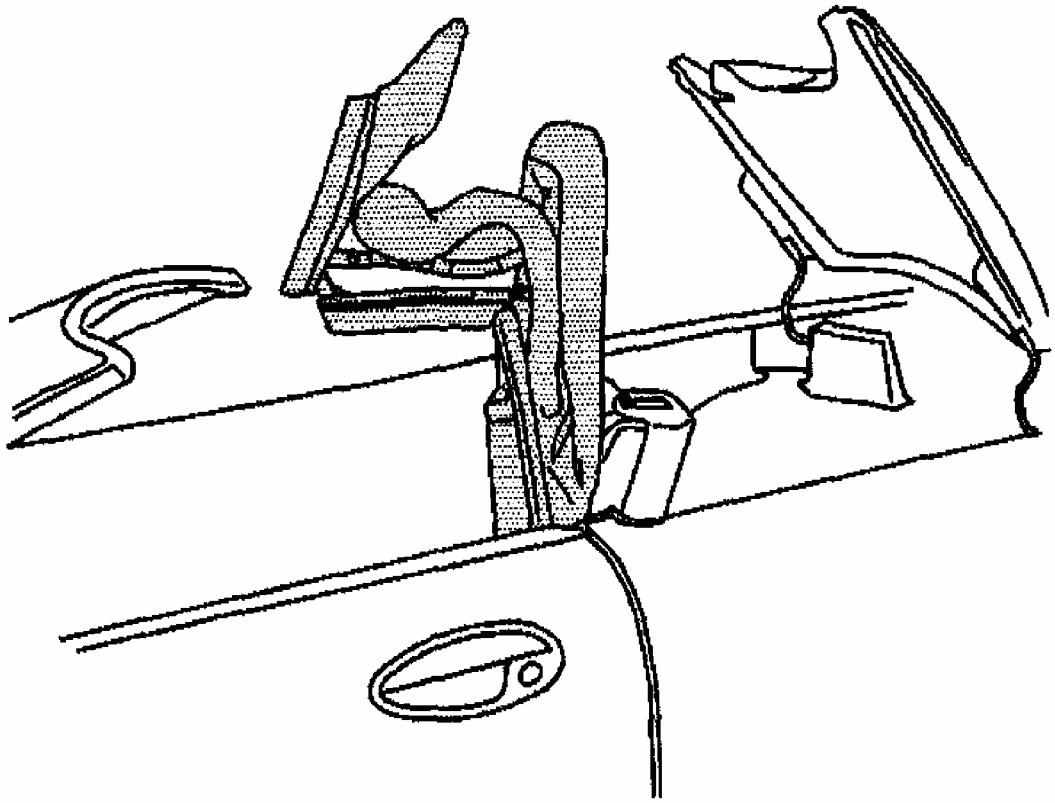

G01734448

Fig. 125: Aligning Folding Top
Courtesy of GENERAL MOTORS CORP.

3. Using a pair of needle nose pliers remove the top cover staples from the #1 bow.

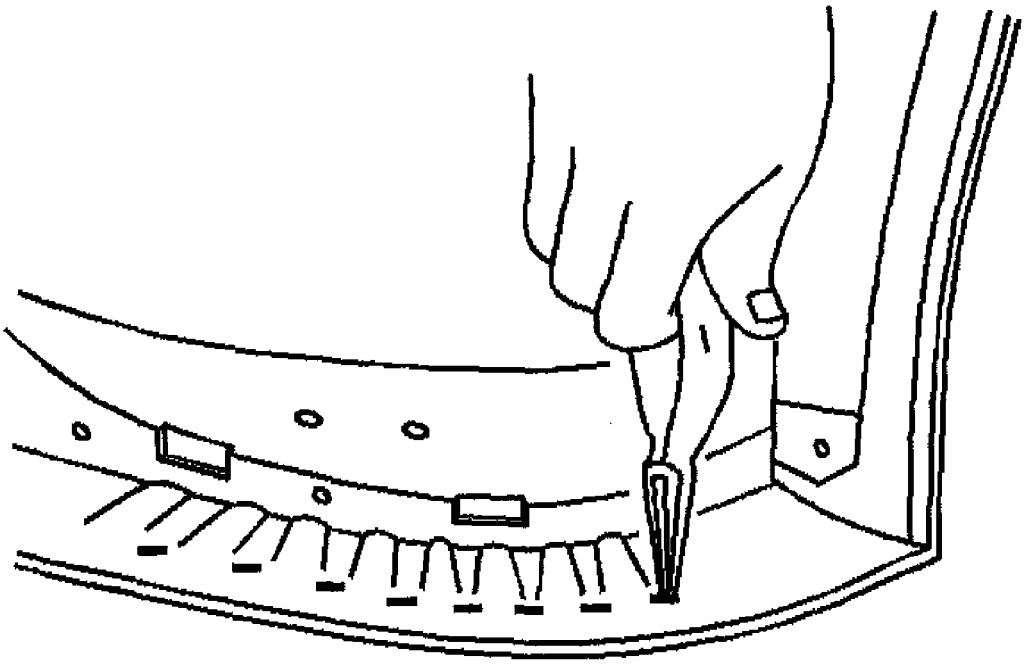

Fig. 126: Removing #1 Bow Top Cover Staples
Courtesy of GENERAL MOTORS CORP.

4. Using a pair of needle nose pliers remove the headliner staples from the #1 bow.
5. Pull the top cover back over the #3 bow.

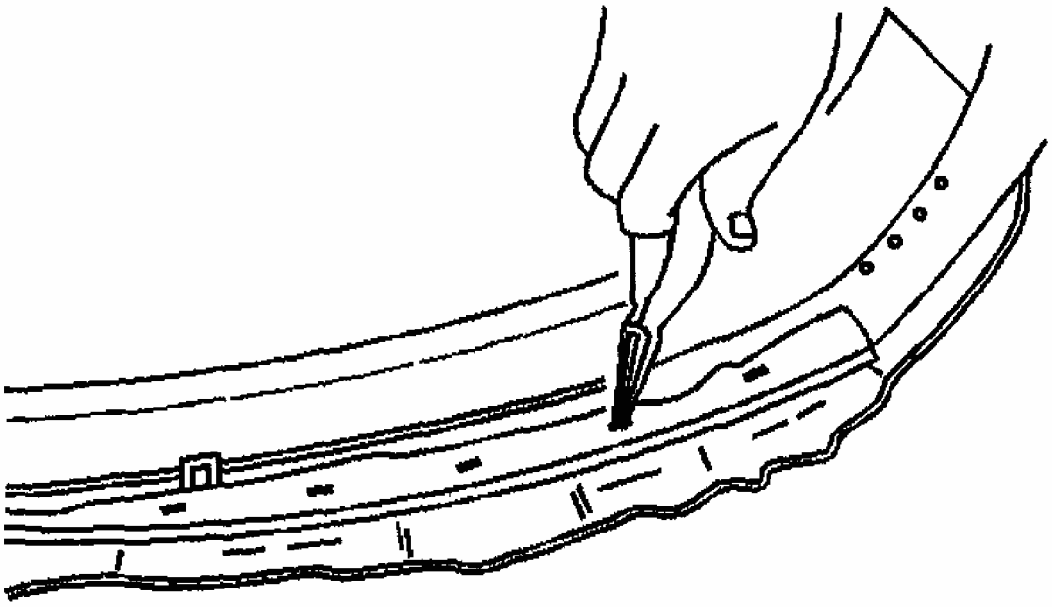

Fig. 127: Removing #1 Bow Headliner Staples
Courtesy of GENERAL MOTORS CORP.

6. Remove the headliner side screws from the #1 bow.

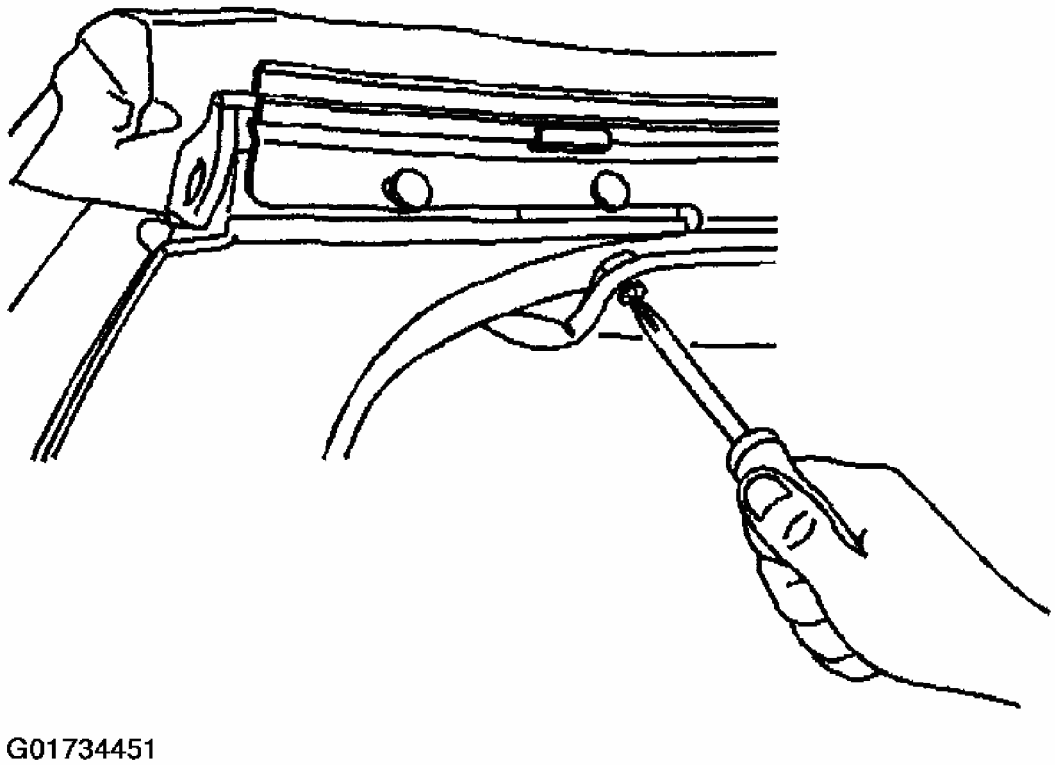

Fig. 128: Removing #1 Bow Headliner Side Screws
Courtesy of GENERAL MOTORS CORP.

7. Using a pair of needle nose pliers remove the headliner extension push on retainers from the studs on the #1 bow.

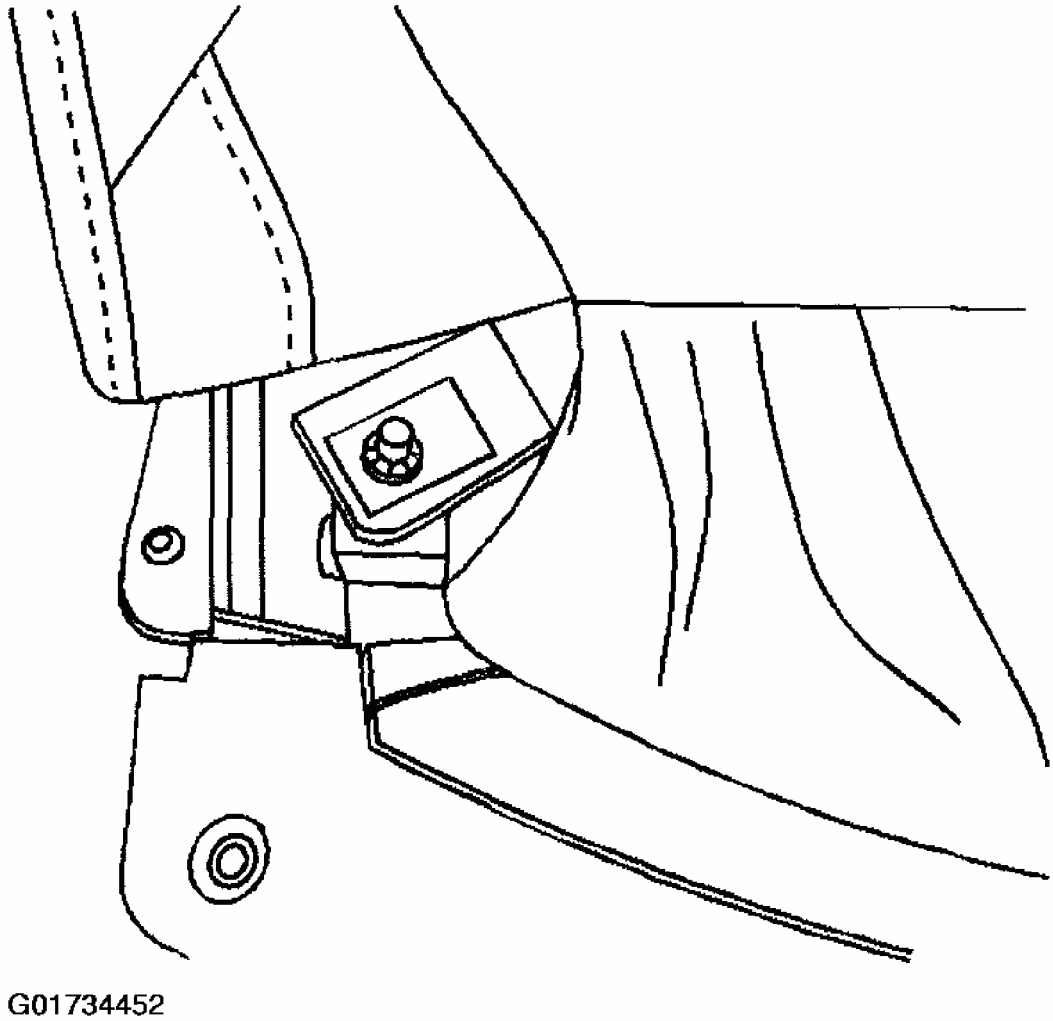

Fig. 129: Identifying Headliner Extension Push On Retainers
Courtesy of GENERAL MOTORS CORP.

8. Remove the headliner retainer screws from the #2 bow.

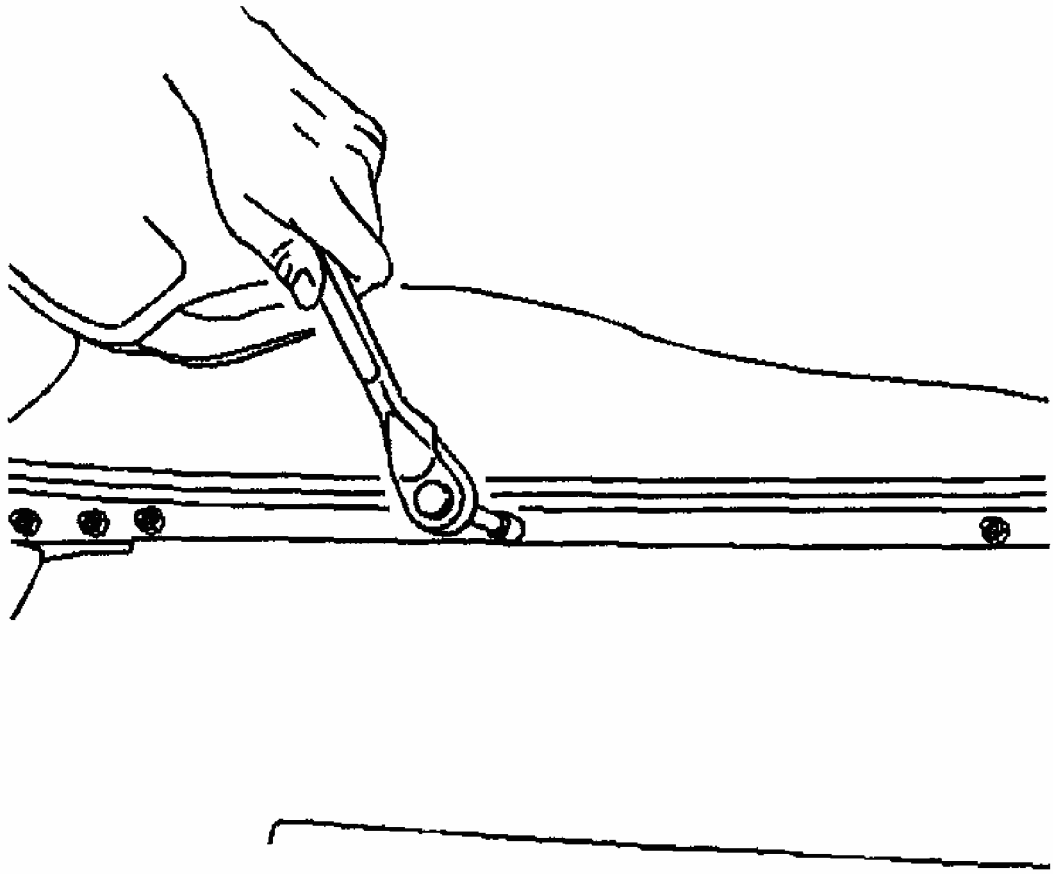

G01734453

Fig. 130: Removing #2 Bow Headliner Retainer Screws
Courtesy of GENERAL MOTORS CORP.

9. Position the top in a closed position with the folding top stowage lid open to gain access to the headliner attachments.

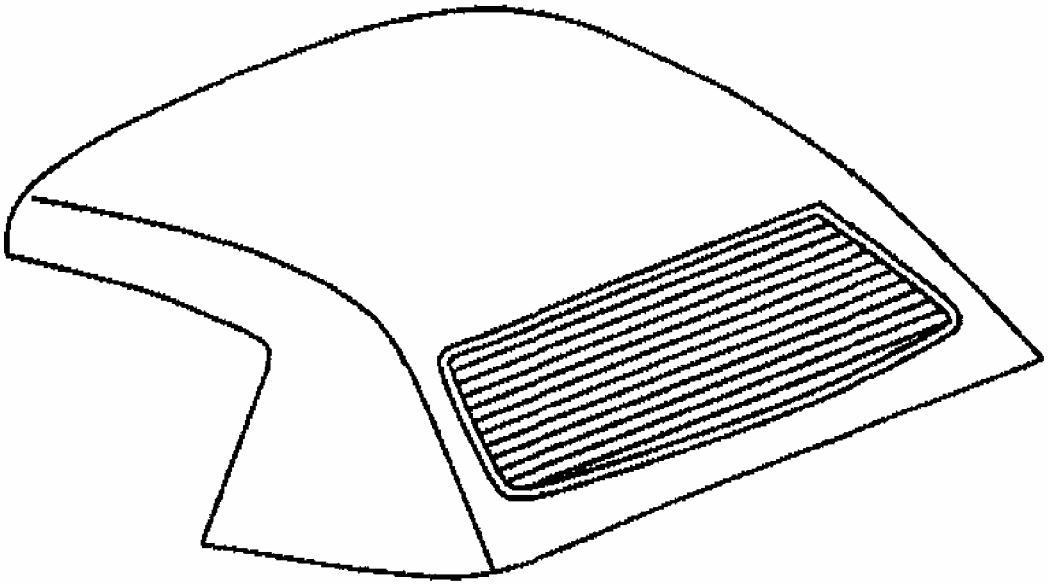

Fig. 131: Identifying Closed Top
Courtesy of GENERAL MOTORS CORP.

10. Remove the headliner elastic strap retainer screws from the #5 bow.
11. Remove the headliner elastic strap retainer screws from the rear side rail.
12. Remove the headliner screws from the rear side rail.
13. Position the #1 and #5 bow up to gain access to the #4 bow screws.

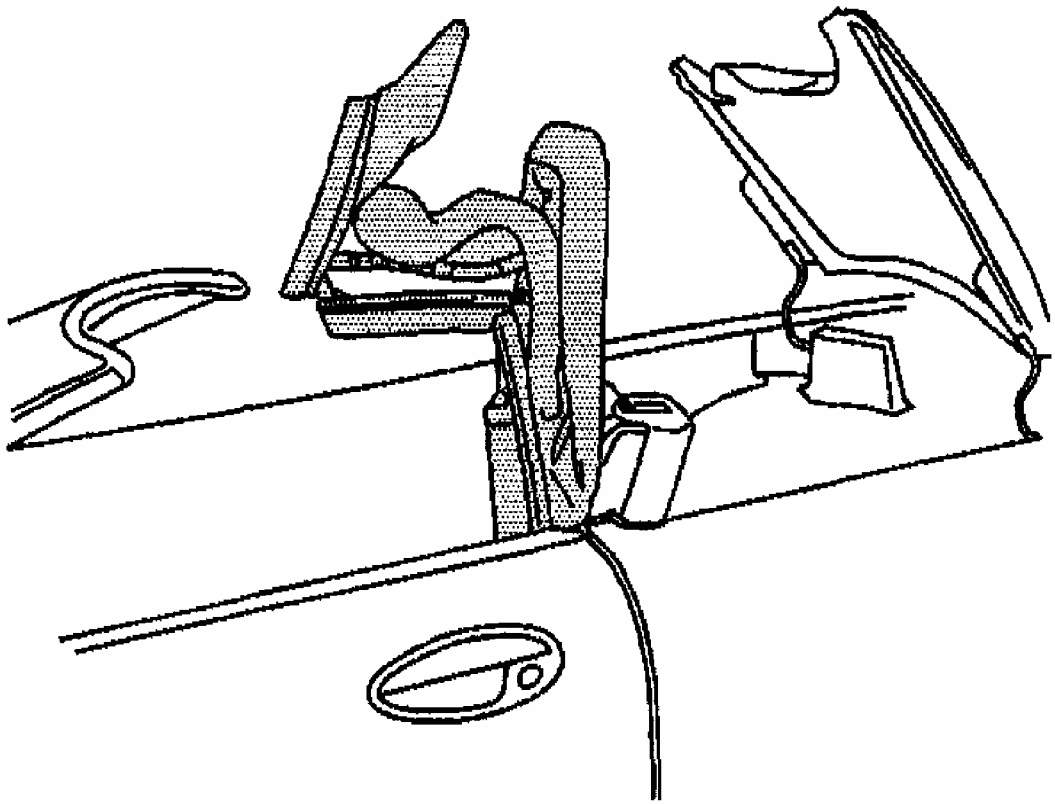

Fig. 132: Aligning Folding Top
Courtesy of GENERAL MOTORS CORP.

14. Remove the rear window support strap screws from the number four bow.

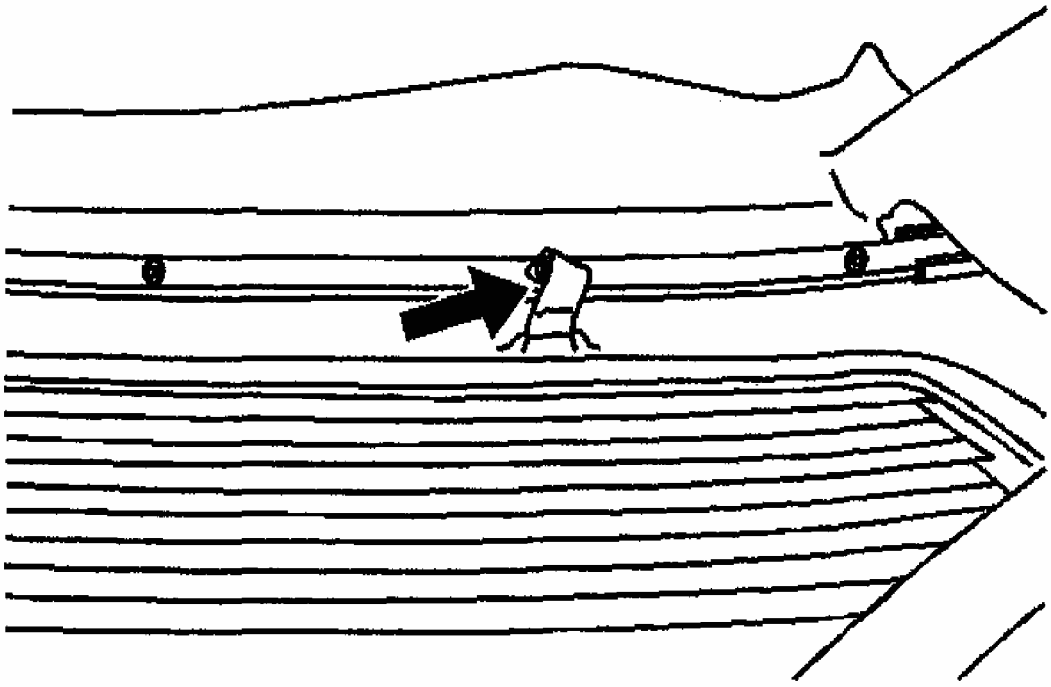

G01734456

Fig. 133: Locating #4 Bow Rear Window Support Strap Screws
Courtesy of GENERAL MOTORS CORP.

15. Remove the headliner retainer screws from the #4 bow.

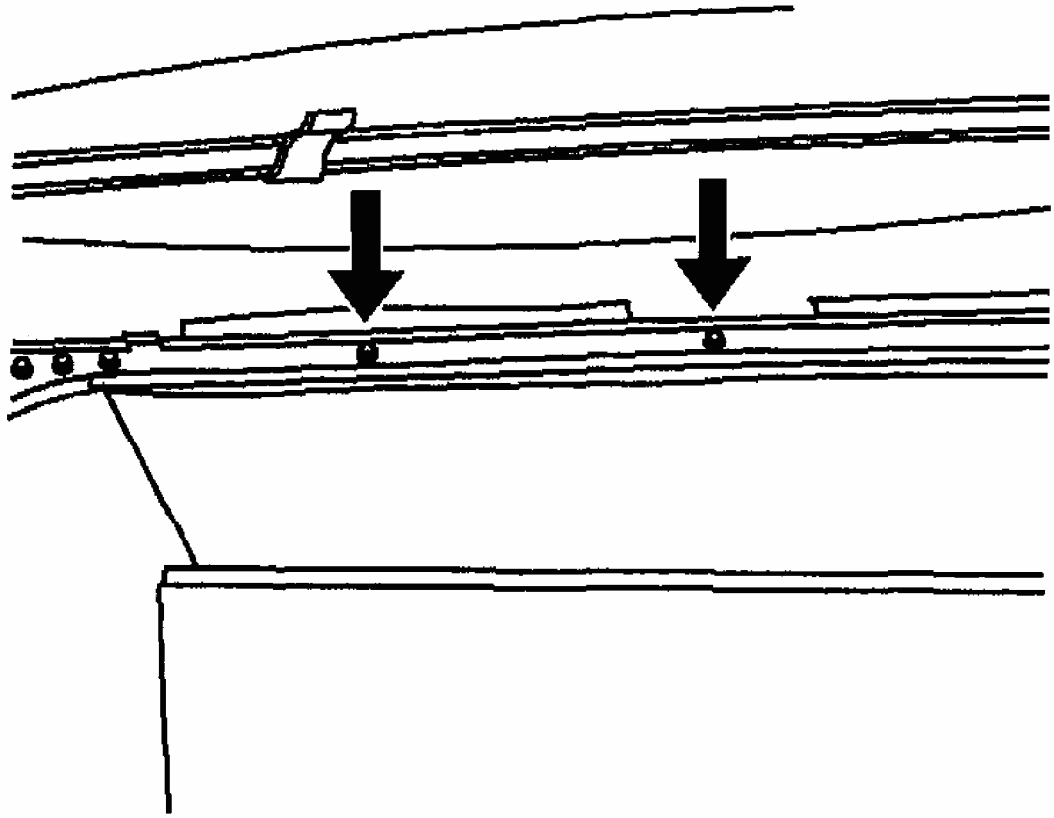

Fig. 134: Locating #4 Bow Headliner Retainer Screws
Courtesy of GENERAL MOTORS CORP.

16. Remove the headliner retainer screws from the #3 bow.
17. Remove the headliner.

Installation Procedure

1. Install the headliner retainer to the #3 bow.

CAUTION: Refer to FASTENER NOTICE .

2. Install the headliner retainer screws to the #3 bow.

Tighten

Tighten the screws to 2 N.m (18 lb in).

3. Install the headliner retainer screws to the #4 bow.

   Tighten

   Tighten the screws to 2 N.m (18 lb in).

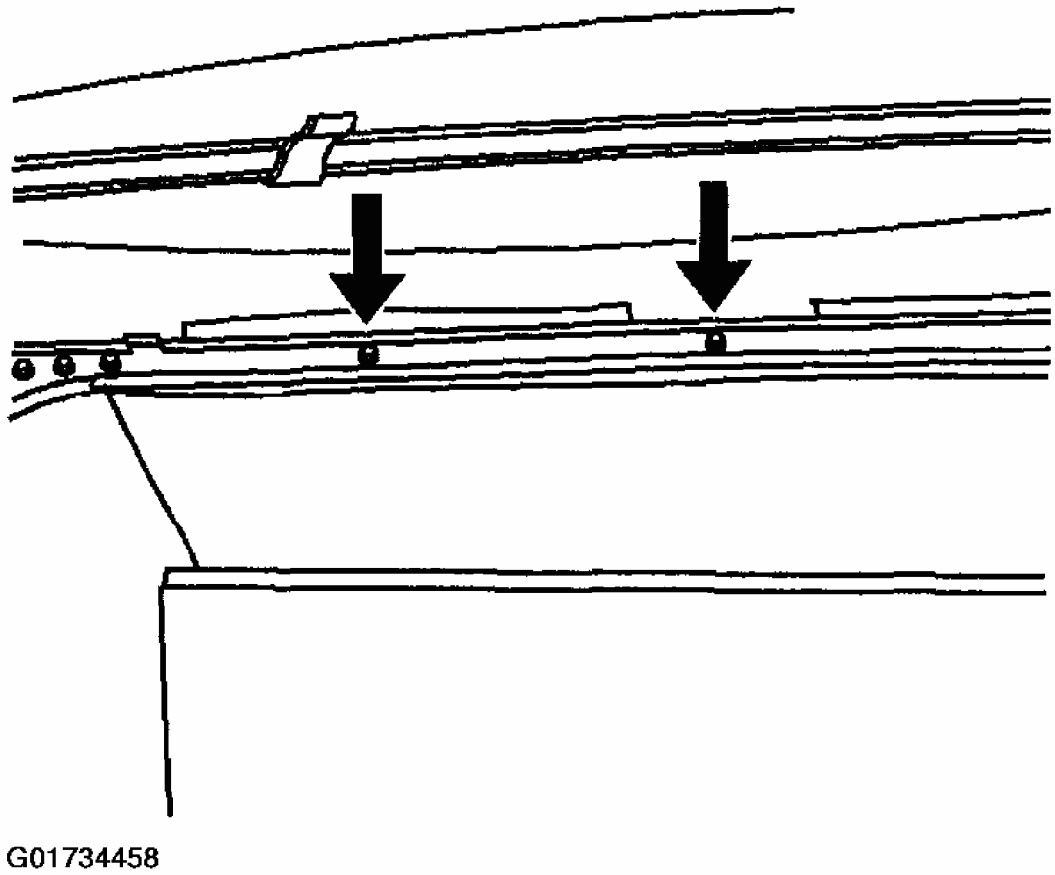

Fig. 135: Locating #3, #4 Bow Headliner Retainer Screws
Courtesy of GENERAL MOTORS CORP.

4. Install the rear window support strap screws to the #4 bow.

   Tighten

   Tighten the screws to 2 N.m (18 lb in).

5. Install the headliner elastic strap retainer screws to the rear side rails.

   Tighten

Tighten the screws to 2 N.m (18 lb in).

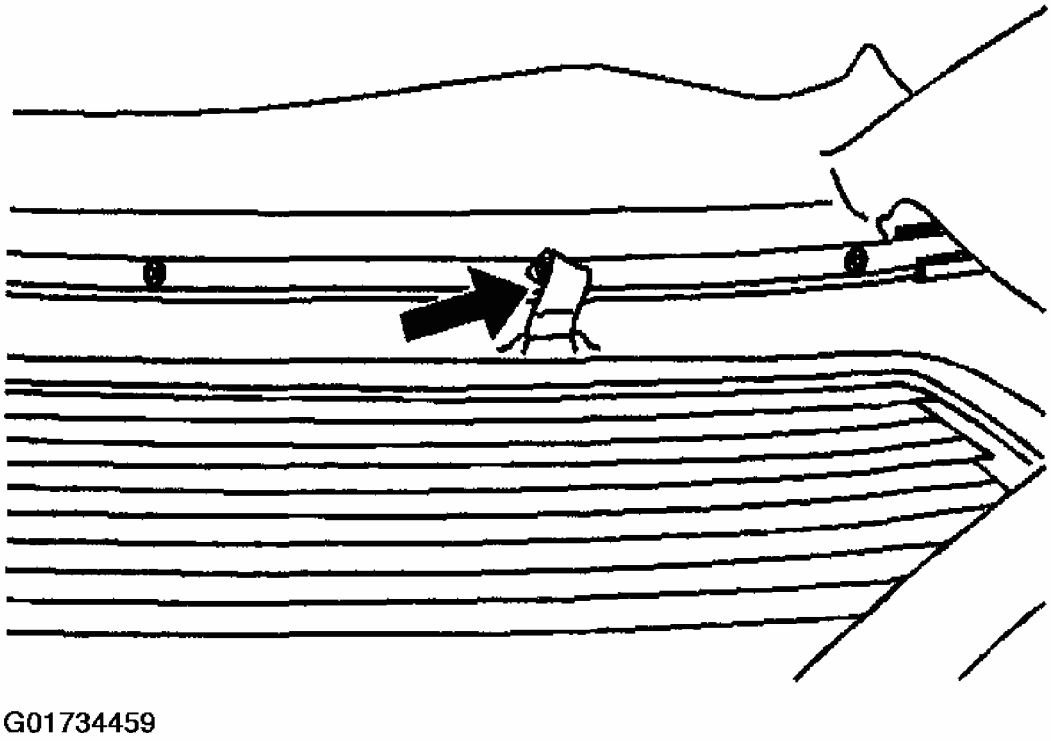

Fig. 136: Locating #4 Bow Rear Window Support Strap Screws
Courtesy of GENERAL MOTORS CORP.

6. Install the headliner screws to the rear side rails.

   Tighten

   Tighten the screws to 2 N.m (18 lb in).

7. Install the headliner elastic strap retainers screws to the #5 bow.

   Tighten

   Tighten the screws to 2 N.m (18 lb in).

8. Position the #1 and #5 bow up.

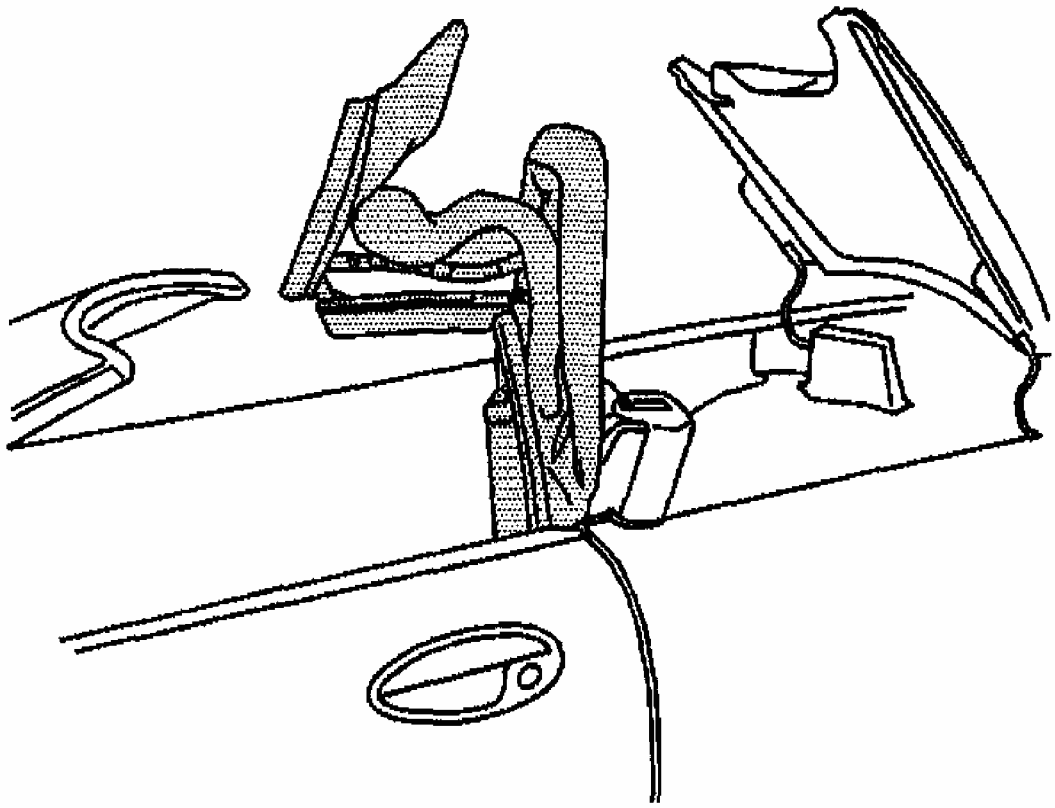

Fig. 137: Aligning Folding Top
Courtesy of GENERAL MOTORS CORP.

9. Install the headliner retainer screws to the #2 bow.

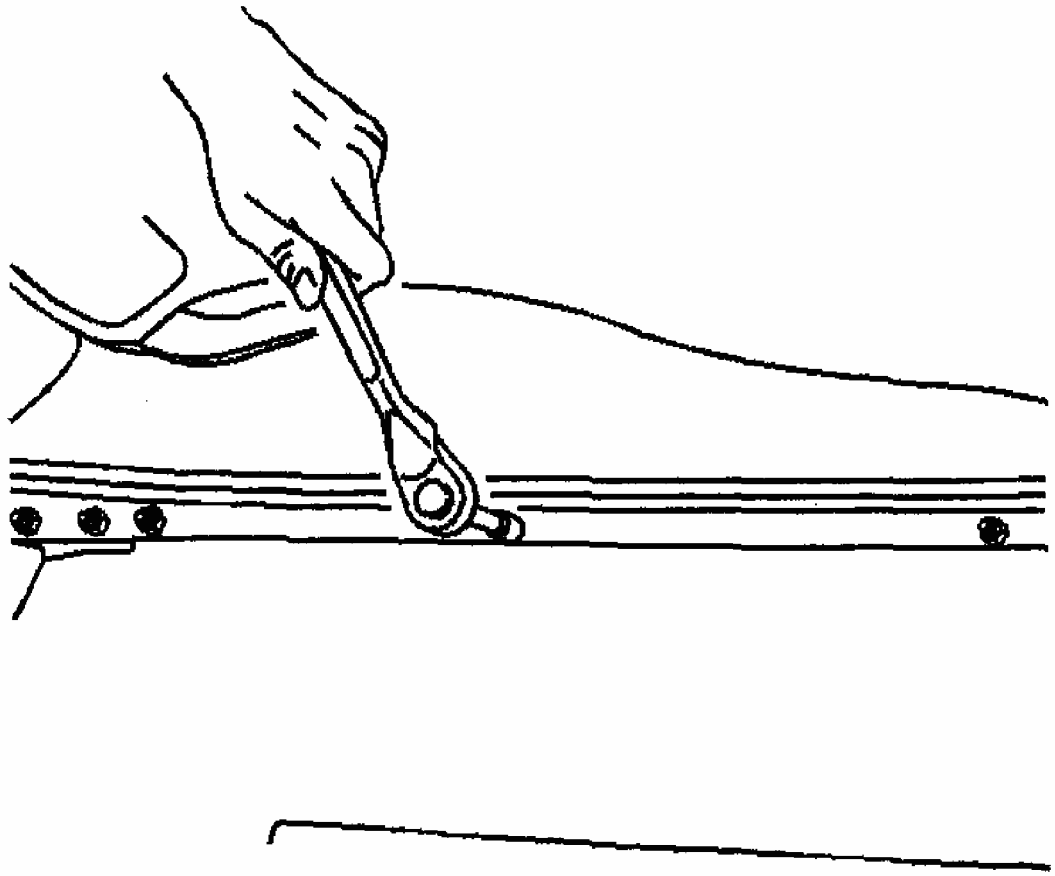

Fig. 138: Installing #2 Bow Headliner Retainer Screws
Courtesy of GENERAL MOTORS CORP.

Tighten

Tighten the to 2 N.m (18 lb in).

10. Install the headliner extension push on retainers to the #1 bow stud.

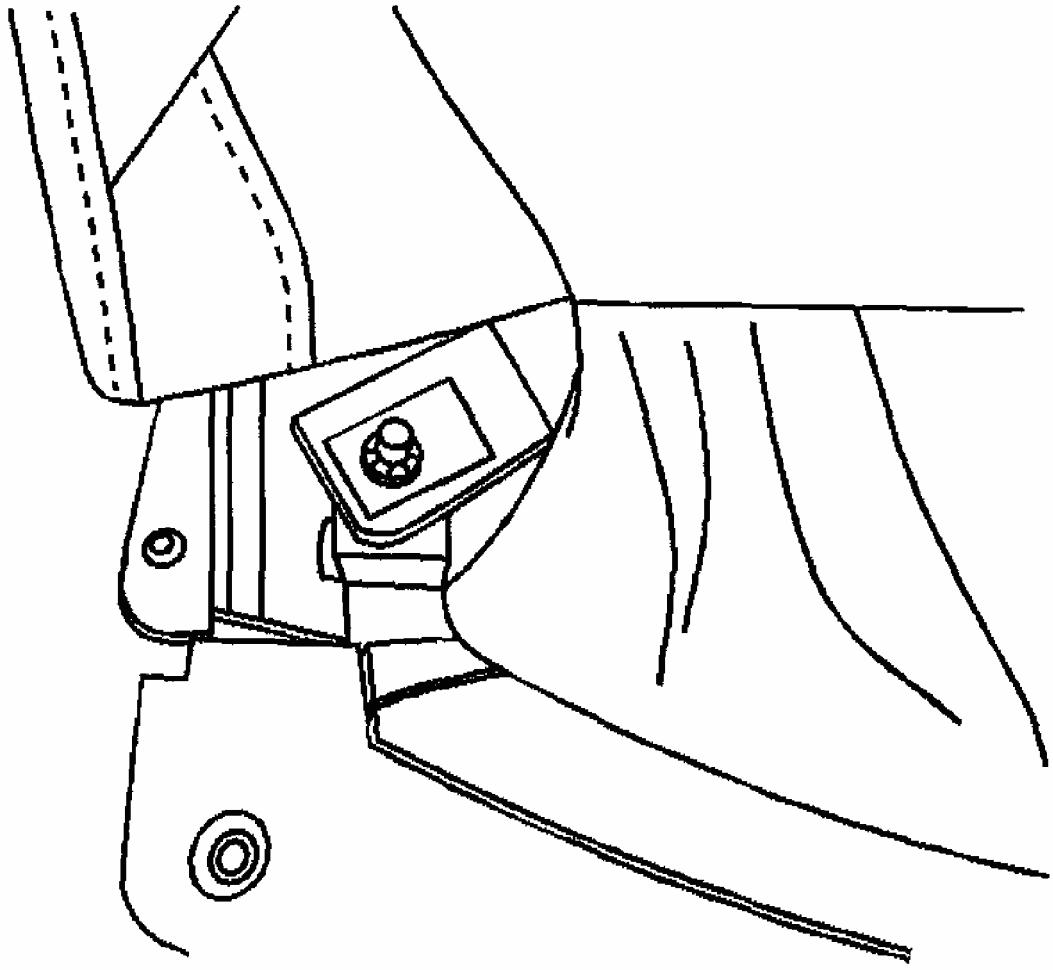

Fig. 139: Identifying #1 Bow Headliner Extension Push On Retainers
Courtesy of GENERAL MOTORS CORP.

11. Install the right and left side headliner screws to the #1 bow.

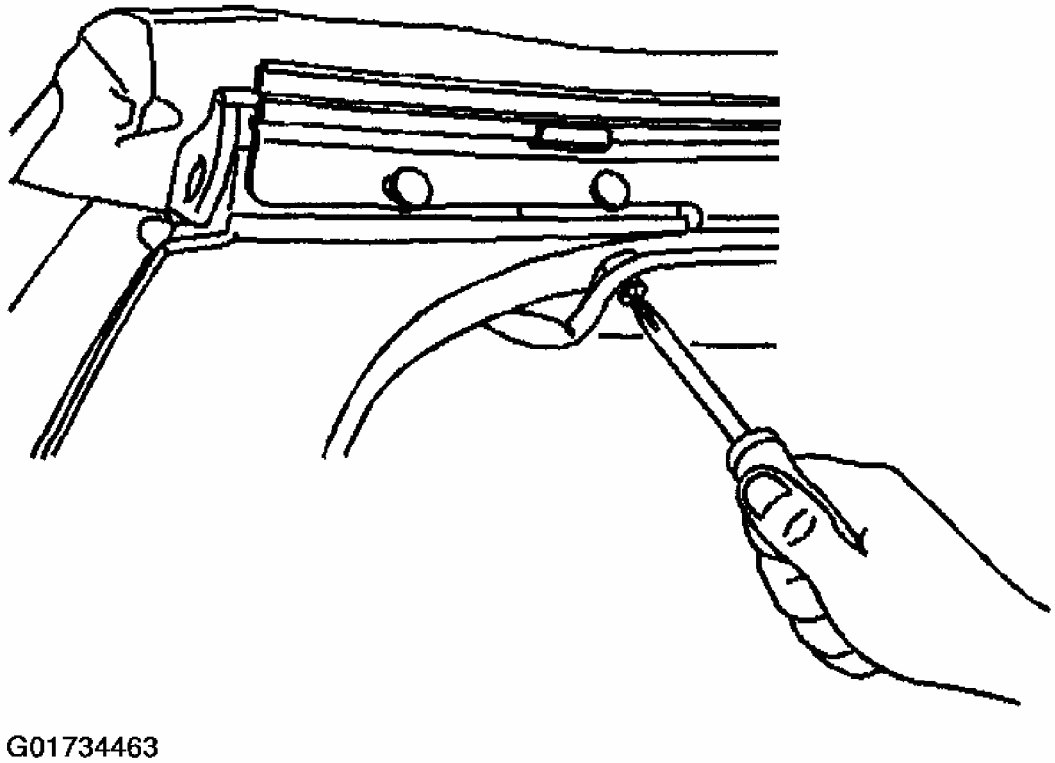

Fig. 140: Installing #1 Bow Headliner Screws
Courtesy of GENERAL MOTORS CORP.

Tighten

Tighten the screws to 2 N.m (18 lb in).

12. Staple the headliner to the #1 bow.

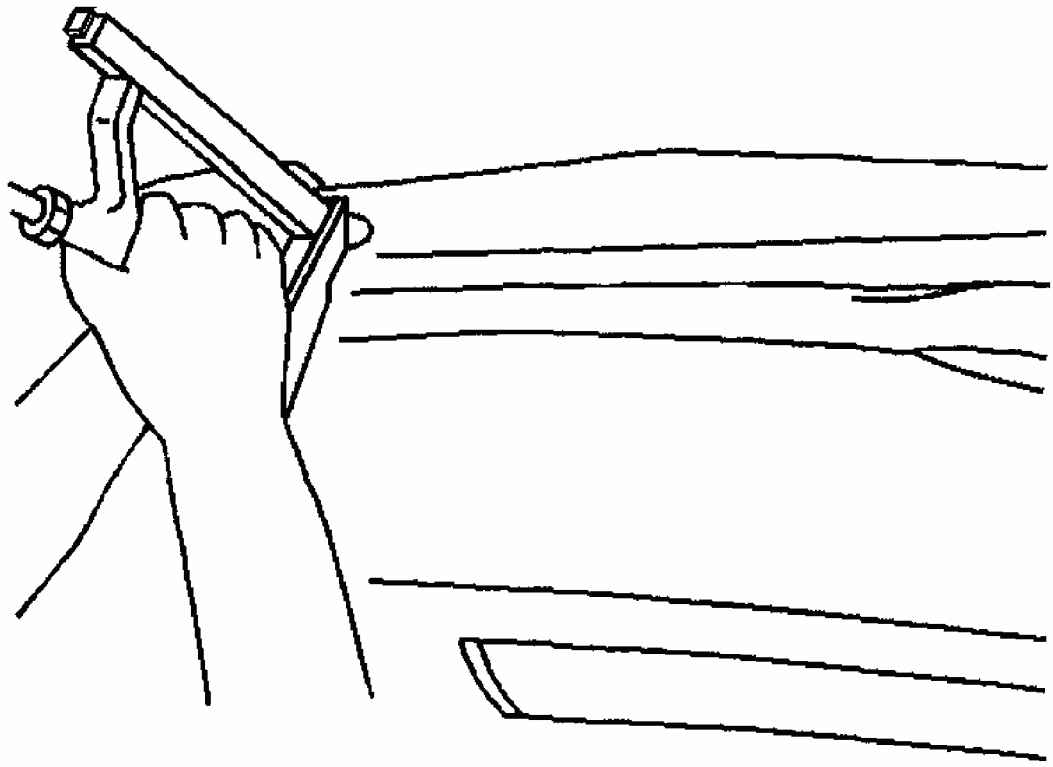

Fig. 141: Installing #1 Bow Headliner Staples
Courtesy of GENERAL MOTORS CORP.

13. Before stapling the top cover to the #1 bow, refer to **FOLDING TOP COVER TENSION ADJUSTMENT - FRONT** .
14. Reposition the folding top to the original position.

HEADLINER REPLACEMENT - ROOF LIFT OFF PANEL

Removal Procedure

1. Remove the roof panel.

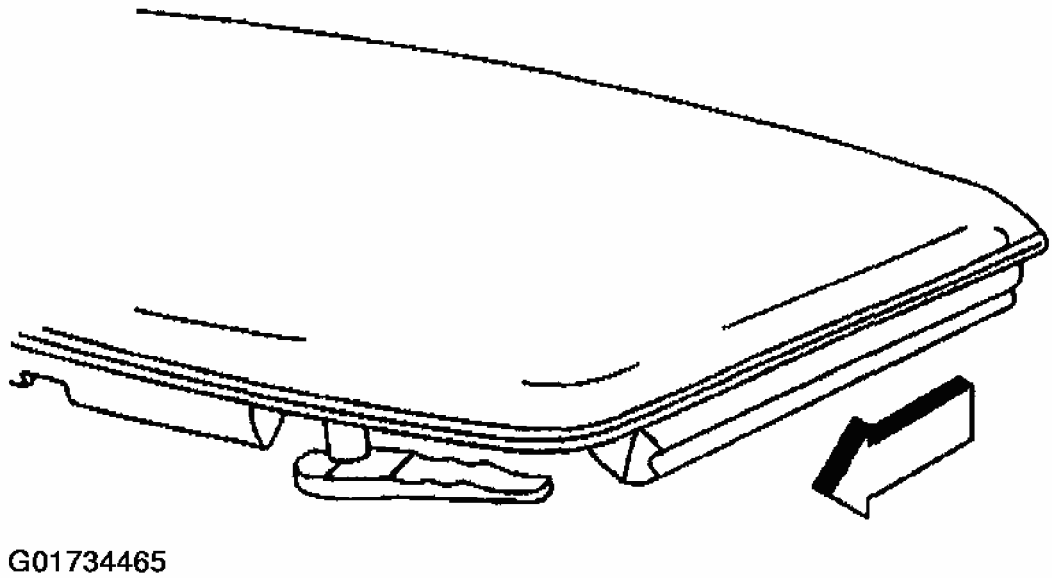

Fig. 142: Removing Roof Lift Off Panel
Courtesy of GENERAL MOTORS CORP.

2. Remove the headliner from the roof panel by peeling away the glued areas of the headliner from the roof panel.
3. Remove any adhesive residue from the roof panel headliner contact area.

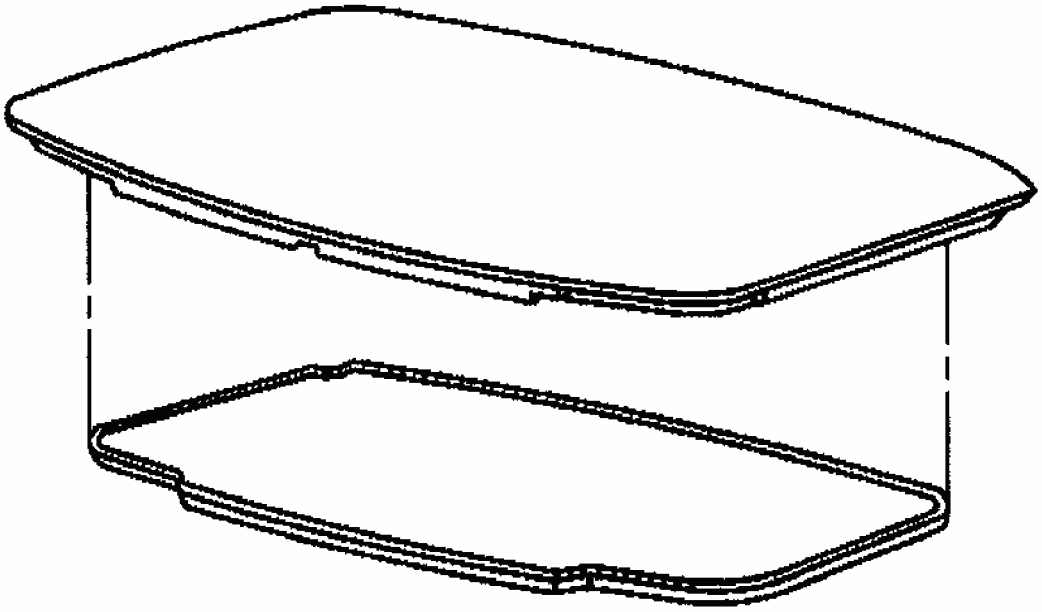

G01734466

Fig. 143: Removing Headliner
Courtesy of GENERAL MOTORS CORP.

Installation Procedure

1. Remove the protective covering from the adhesive on the headliner contact areas.
2. Install the headliner to the roof lift off panel.
   - **2.1.** Place the forward edge of headlining against the forward frame of the roof.
   - **2.2.** Press firmly on the adhesive contact areas to engage the adhesive.
   - **2.3.** Using a spatula, tuck the headliner between the roof panel and the roof frame.

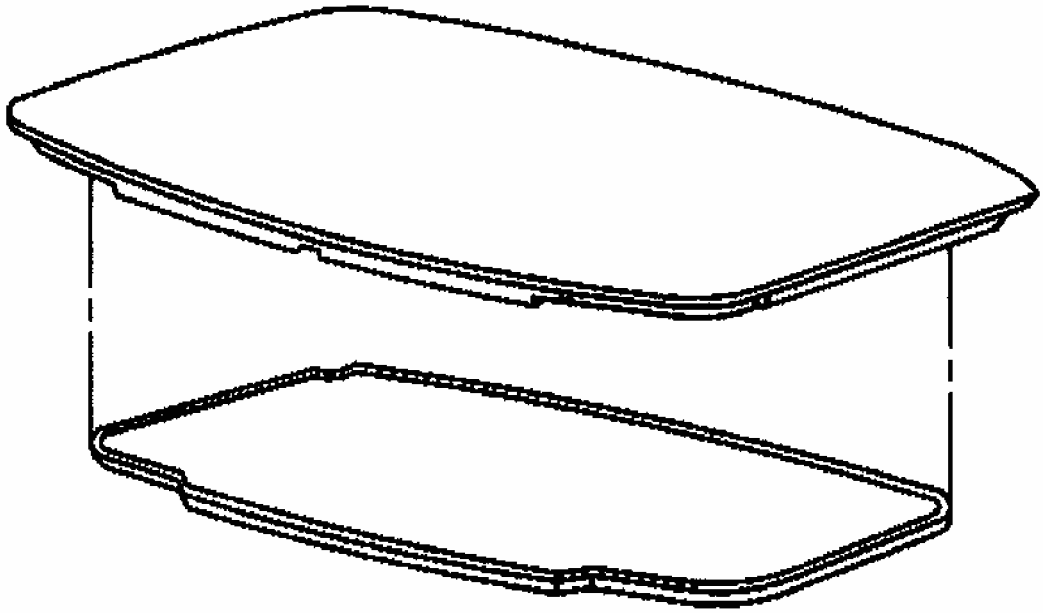

G01734467

Fig. 144: Installing Headliner
Courtesy of GENERAL MOTORS CORP.

3. Install the roof lift off panel.

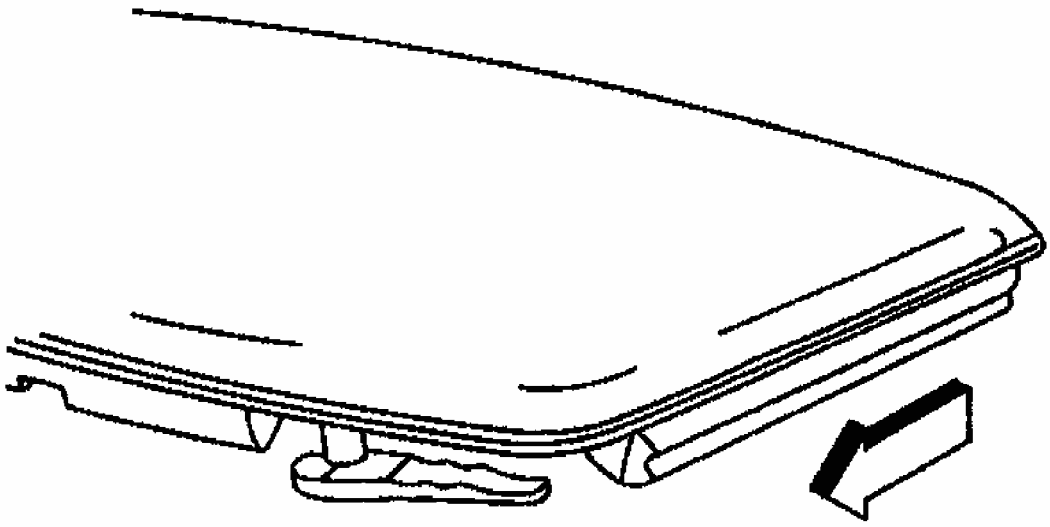

G01734468

Fig. 145: Installing Roof Lift Off Panel
Courtesy of GENERAL MOTORS CORP.

HARD TOP HEADLINER REPLACEMENT

Removal Procedure

1. Remove the windshield side garnish moldings. Refer to **WINDSHIELD SIDE GARNISH MOLDING REPLACEMENT** .

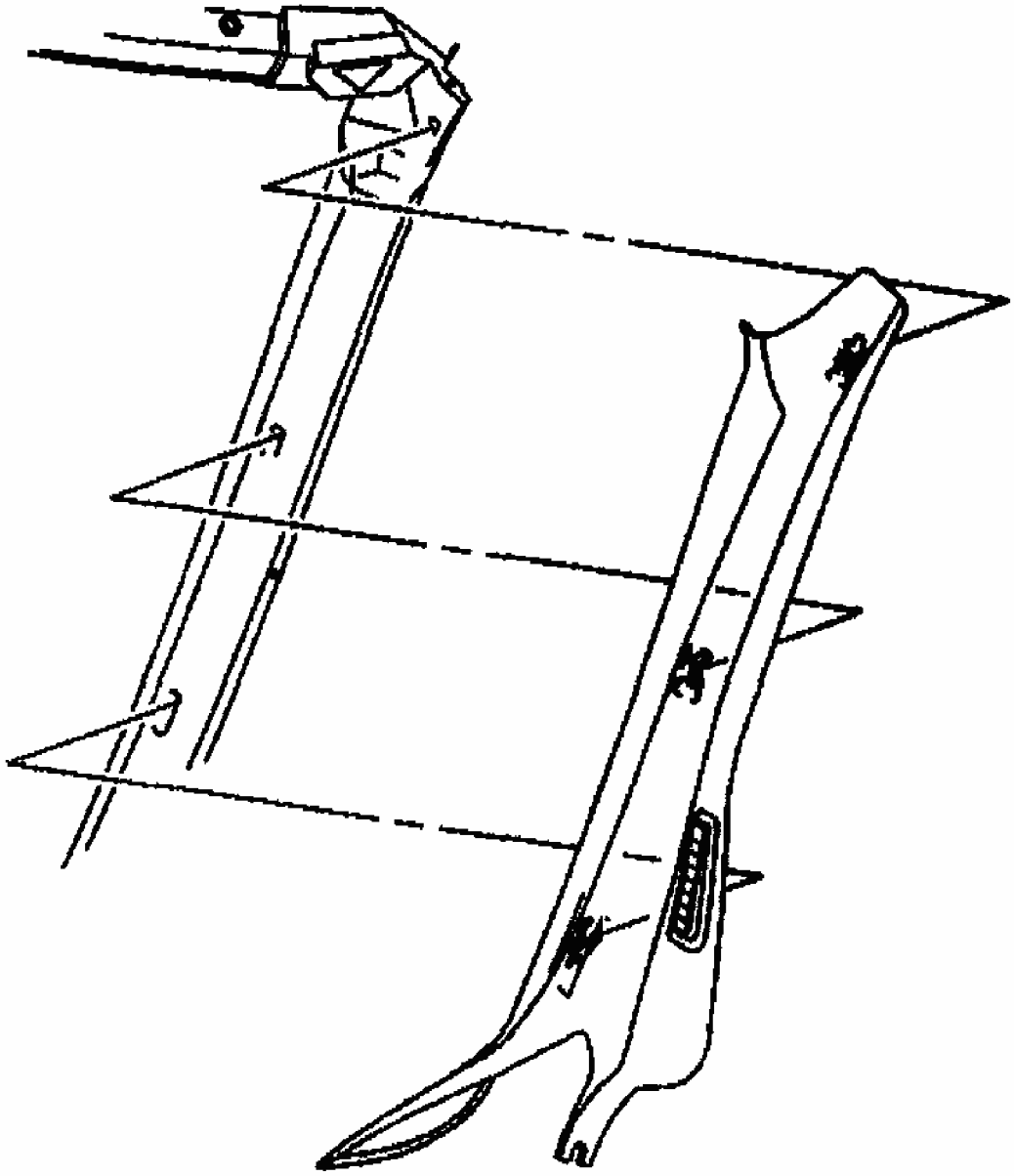

Fig. 146: Removing Windshield Side Garnish Molding Fasteners
Courtesy of GENERAL MOTORS CORP.

2. Remove the rear compartment front side trim panels. Refer to **Trim Panel Replace - Rear Compartment Front Side (Coupe)** or **Trim Panel Replace - Rear Compartment Front Side (Convertible)** or **Trim Panel Replace - Rear Compartment Front Side (Hardtop)** .
3. Support the headlining.

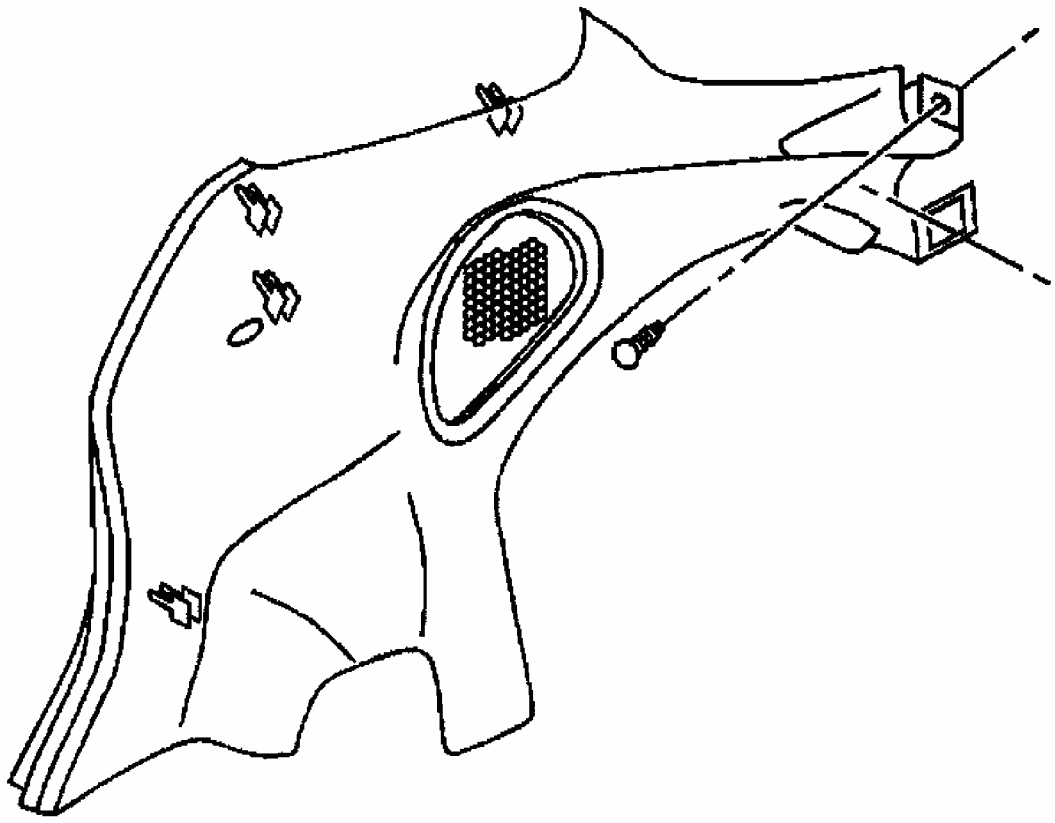

Fig. 147: Removing Front Side Trim Panel Push In Retainer
Courtesy of GENERAL MOTORS CORP.

4. Remove the retainer from the center of the rear edge of the headlining.

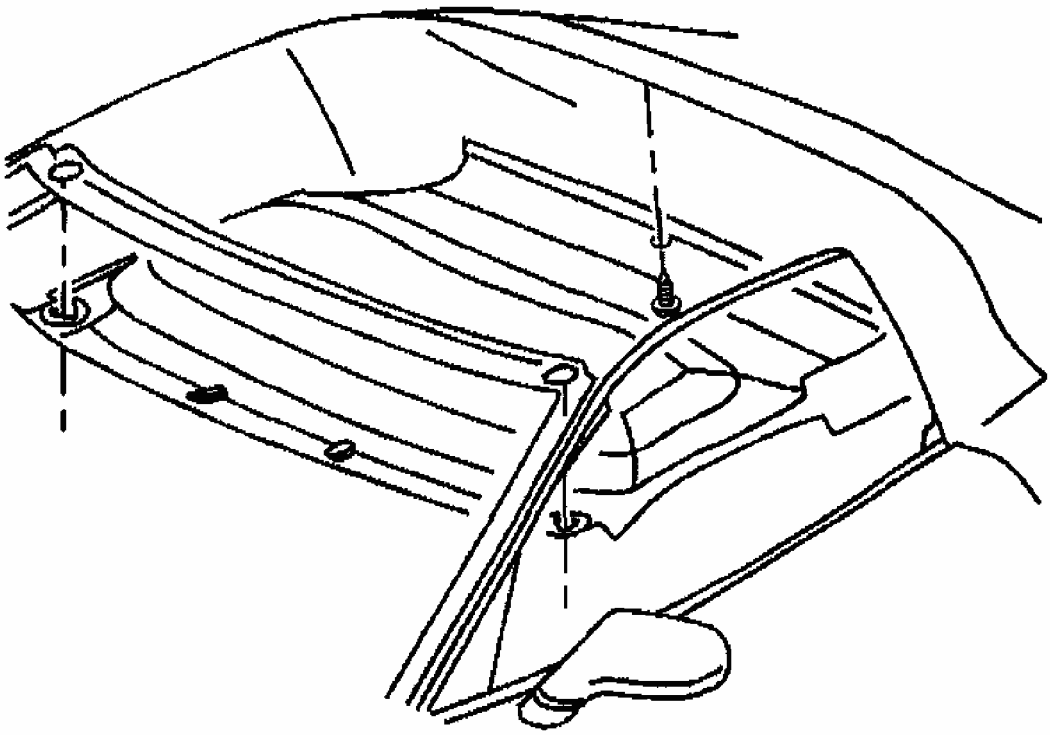

G01734471

Fig. 148: Removing Headliner Retainer
Courtesy of GENERAL MOTORS CORP.

5. Remove the sunshades. Refer to **SUNSHADE REPLACEMENT** .
6. Remove the sunshade bezels.
7. Remove the sunshade supports.
8. Remove the headlining.

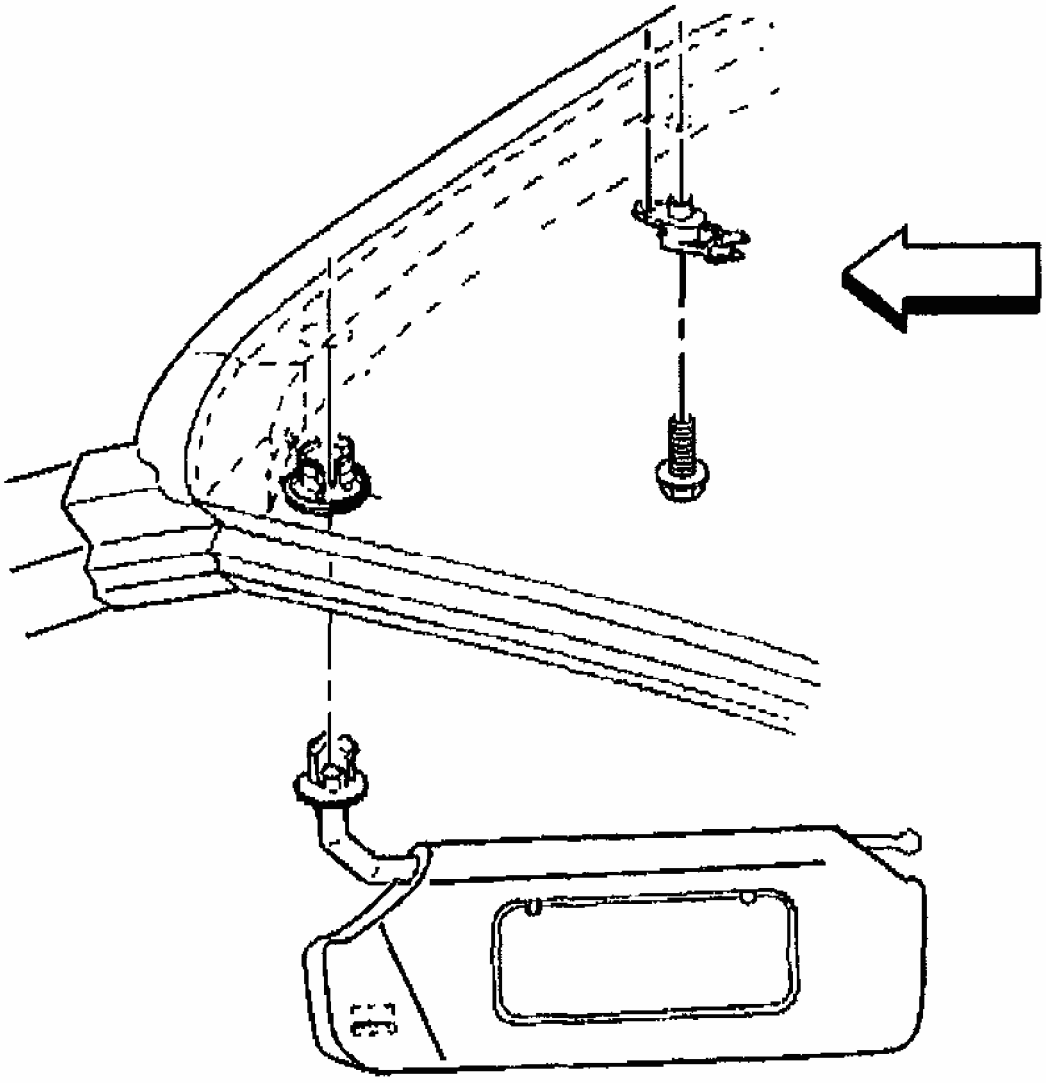

Fig. 149: Removing Sunshade Bezels & Retainer Screws
Courtesy of GENERAL MOTORS CORP.

Installation Procedure

1. Install the headlining to the vehicle.
2. Support the headlining.
3. Install the retainer securing the rear edge of the headlining.

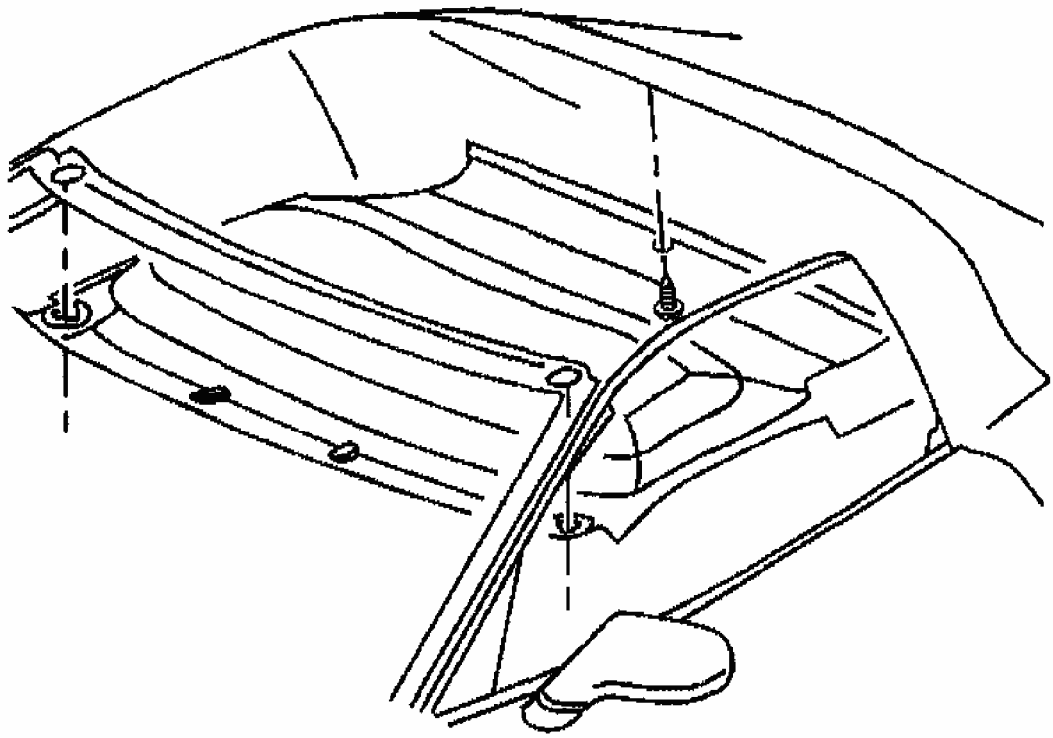

G01734473

Fig. 150: Installing Headliner Retainer
Courtesy of GENERAL MOTORS CORP.

4. Route the sunshade electrical connection through the headlining and the sunshade bezel.
5. Install the sunshade bezels.

   Insert the bezel into the opening until the snap fingers engage.

6. Install the sunshades. Refer to **SUNSHADE REPLACEMENT** .

   CAUTION: Refer to FASTENER NOTICE .

7. Install the sunshade retainers.

   Tighten

   Tighten the sunshade retainer screws to 2 N.m (17 lb in).

8. Remove the headlining temporary support.

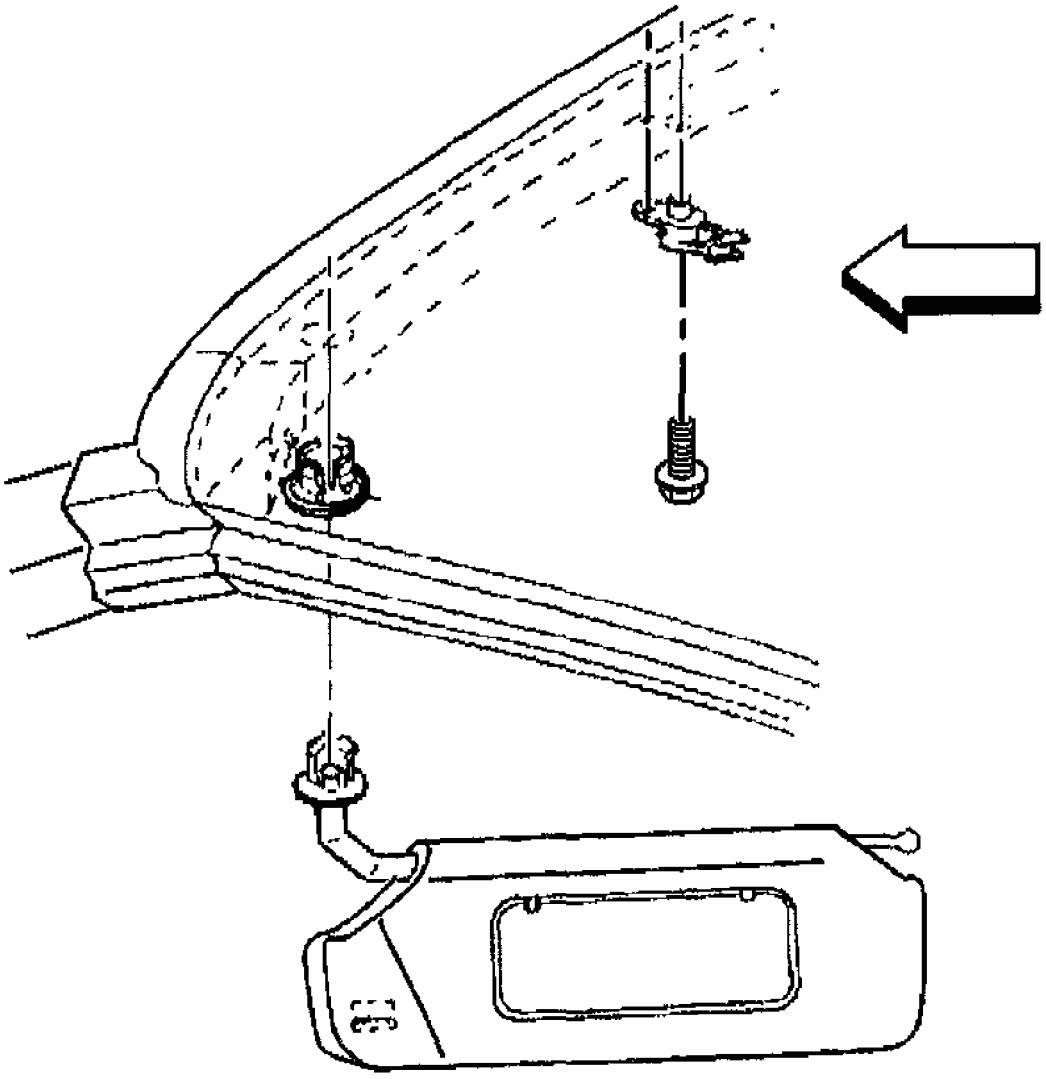

Fig. 151: Installing Sunshade Bezels & Retainer Screws
Courtesy of GENERAL MOTORS CORP.

9. Install the windshield side garnish moldings. Refer to **WINDSHIELD SIDE GARNISH MOLDING REPLACEMENT** .

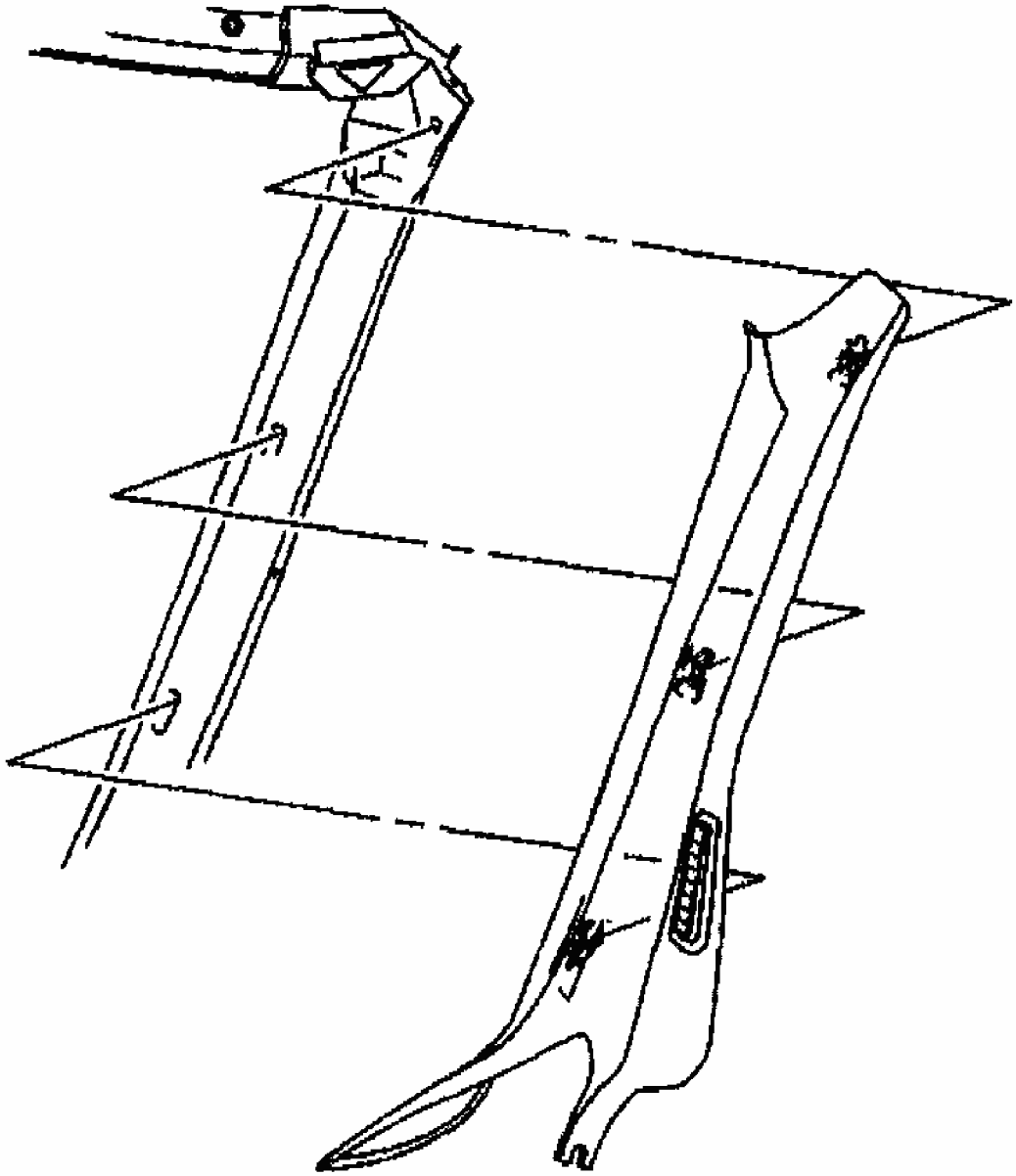

Fig. 152: Installing Windshield Side Garnish Molding Fasteners
Courtesy of GENERAL MOTORS CORP.

10. Install the rear compartment front side trim panels. Refer to **Trim Panel Replace - Rear Compartment Front Side (Coupe)** or **Trim Panel Replace - Rear Compartment Front Side (Convertible)** or **Trim Panel Replace - Rear Compartment Front Side (Hardtop)** .
11. Reposition the inside lip of the door window upper weather-strips over the edge of the

headlining.

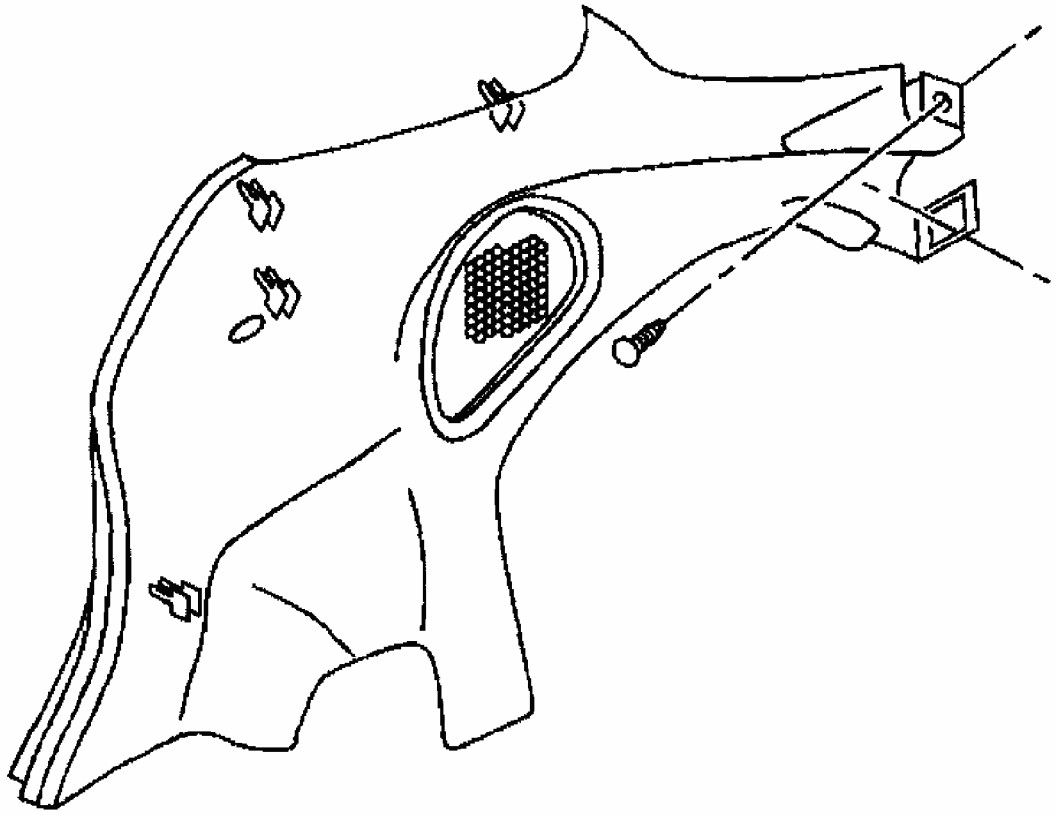

Fig. 153: Installing Front Side Trim Panel Push In Retainer
Courtesy of GENERAL MOTORS CORP.

TRIM PANEL REPLACEMENT - REAR ROOF BOW

Removal Procedure

1. Remove the roof lift off panel.
2. Remove the push-pins from the outer ends of the roof bow center trim panel.
3. Starting in the center of the roof bow center trim panel pull down on the trim panel separating the retaining clips and the hook and loop fastener patches from the roof bow.
4. Remove the roof bow interior trim panel.

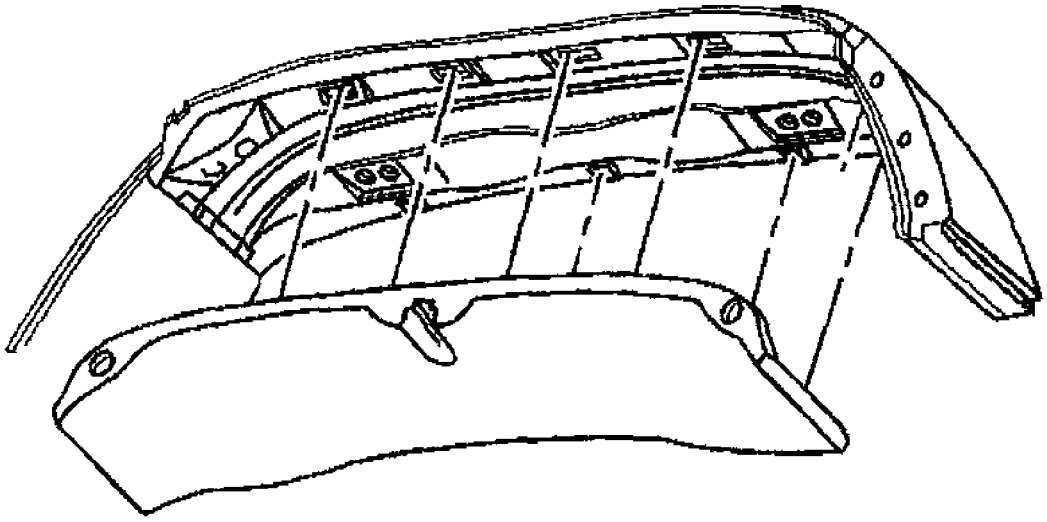

Fig. 154: Removing Roof Bow Interior Trim Panel
Courtesy of GENERAL MOTORS CORP.

Installation Procedure

1. Position the roof bow interior trim panel to the roof bow attaching the left center alignment clip first.
2. Align the rear antenna cable to the notch in the rear flange of the trim panel.
3. Push upward on the trim panel attaching the remaining clips and the hook and loop fastener patches.
4. Install the push-pins through the ends of the roof bow center trim panel.
5. Install the roof lift off panel.

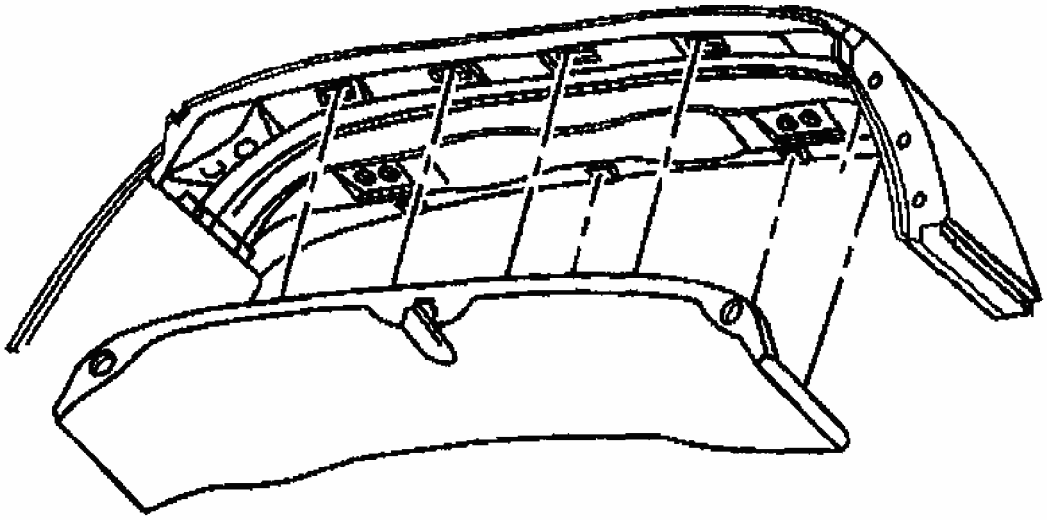

Fig. 155: Installing Roof Bow Interior Trim Panel
Courtesy of GENERAL MOTORS CORP.

SUNSHADE REPLACEMENT

Removal Procedure

1. Tilt the sunshade down toward the windshield.
2. Insert a flat head screwdriver blade into the slot in the sunshade inner bezel.
3. Using the screwdriver against the elbow of the sunshade arm for leverage pull down on the sunshade arm while rotating the sunshade outboard until the sunshade stops (the first tab disengages).
4. Push up on the sunshade and continue rotating the sunshade outboard until the sunshade with the inner bezel disengages from the mounting bezel.

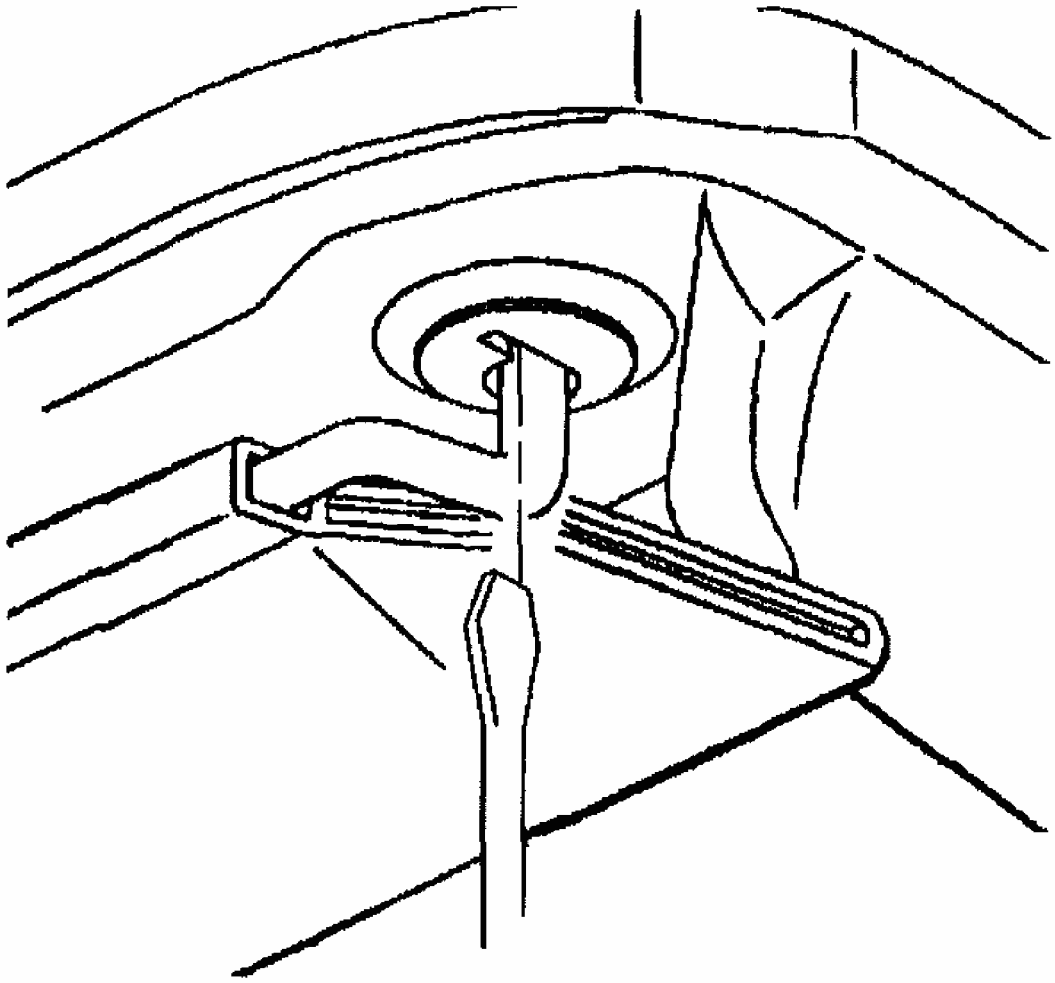

Fig. 156: Removing Sunshade Inner Bezel
Courtesy of GENERAL MOTORS CORP.

5. Disconnect the electrical connector.
6. Remove the sunshade.
7. Disassemble as necessary.
   - If removing the mounting bezel, pull the bezel from the garnish molding with your fingers.
   - If replacing the inner bezel, remove the bezel from the sunshade shaft and press the new bezel onto the shaft.

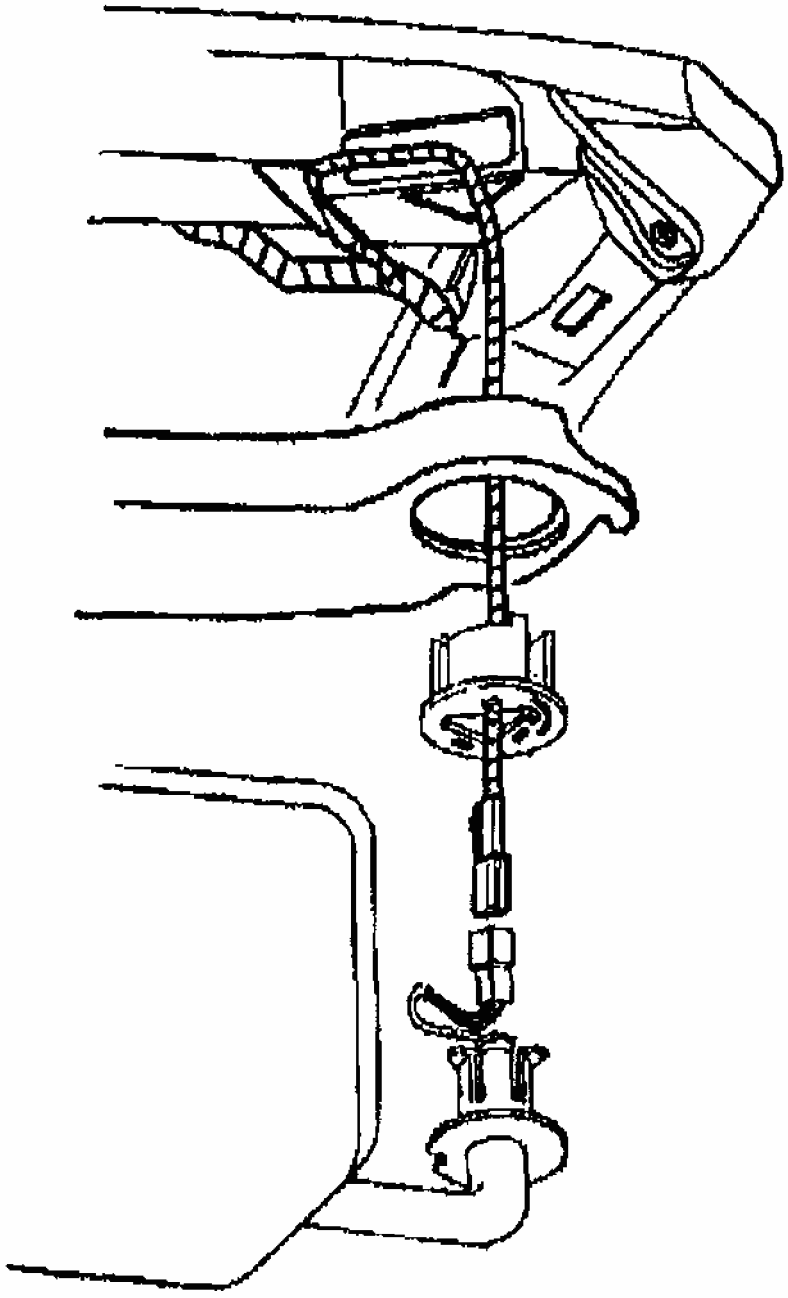

Fig. 157: Disconnecting Sunshade Electrical Connector
Courtesy of GENERAL MOTORS CORP.

Installation Procedure

1. Route the harness through the mounting bezel.
2. Insert the mounting bezel into the garnish molding engaging the snap fingers.

3. Connect the harness to the sunshade electrical connector.
4. Push the connector up through the bezel and through the hole in the garnish molding.
5. Position the sunshade approximately midway between the windshield and the side of the vehicle.
6. Insert the rod with inner bezel firmly attached fully into the mounting bezel.
7. Rotate the sunshade toward the centerline of the vehicle until the sunshade locks in place.

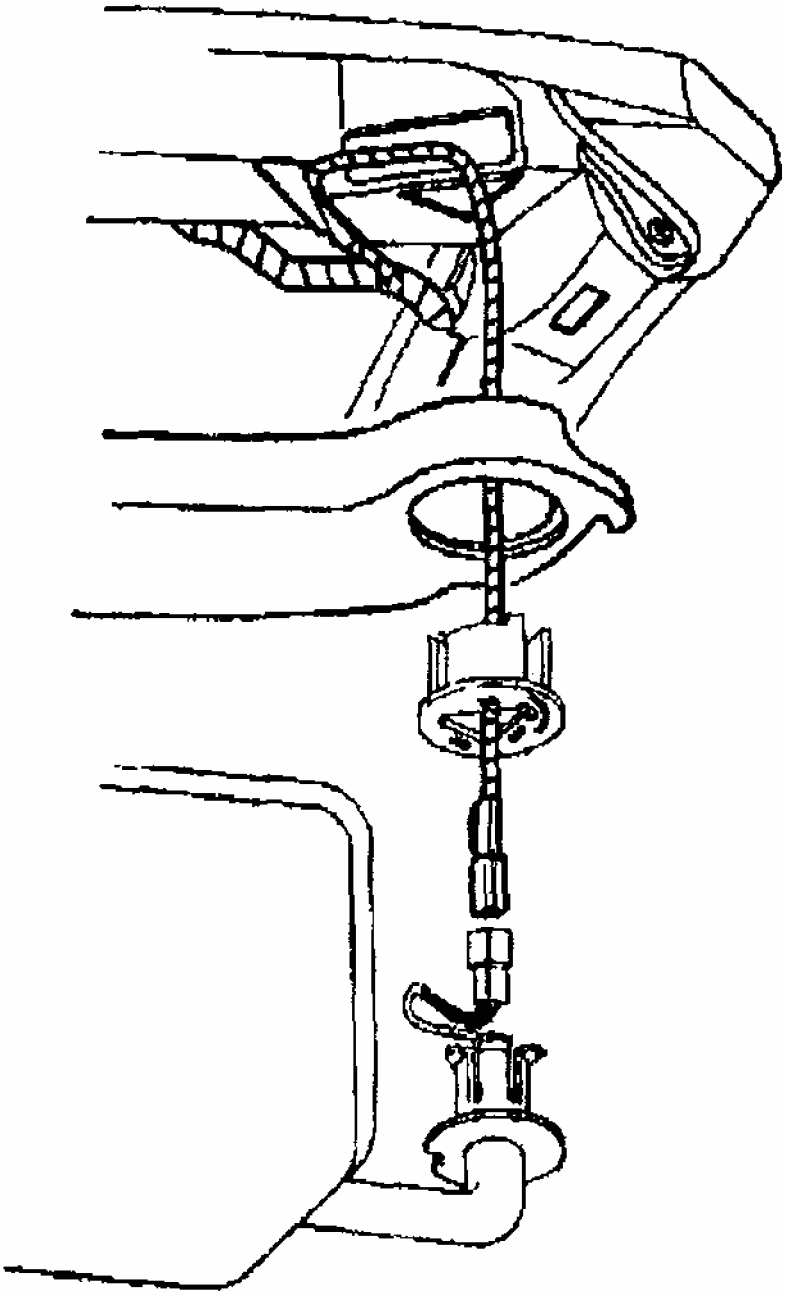

G01734481

Fig. 158: Connecting Sunshade Electrical Connector
Courtesy of GENERAL MOTORS CORP.

WINDSHIELD UPPER GARNISH MOLDING REPLACEMENT

Removal Procedure

1. Remove the windshield side garnish moldings.
   1.1. Grasp the windshield side garnish molding.
   1.2. Pull the molding with its retainers from the windshield frame.

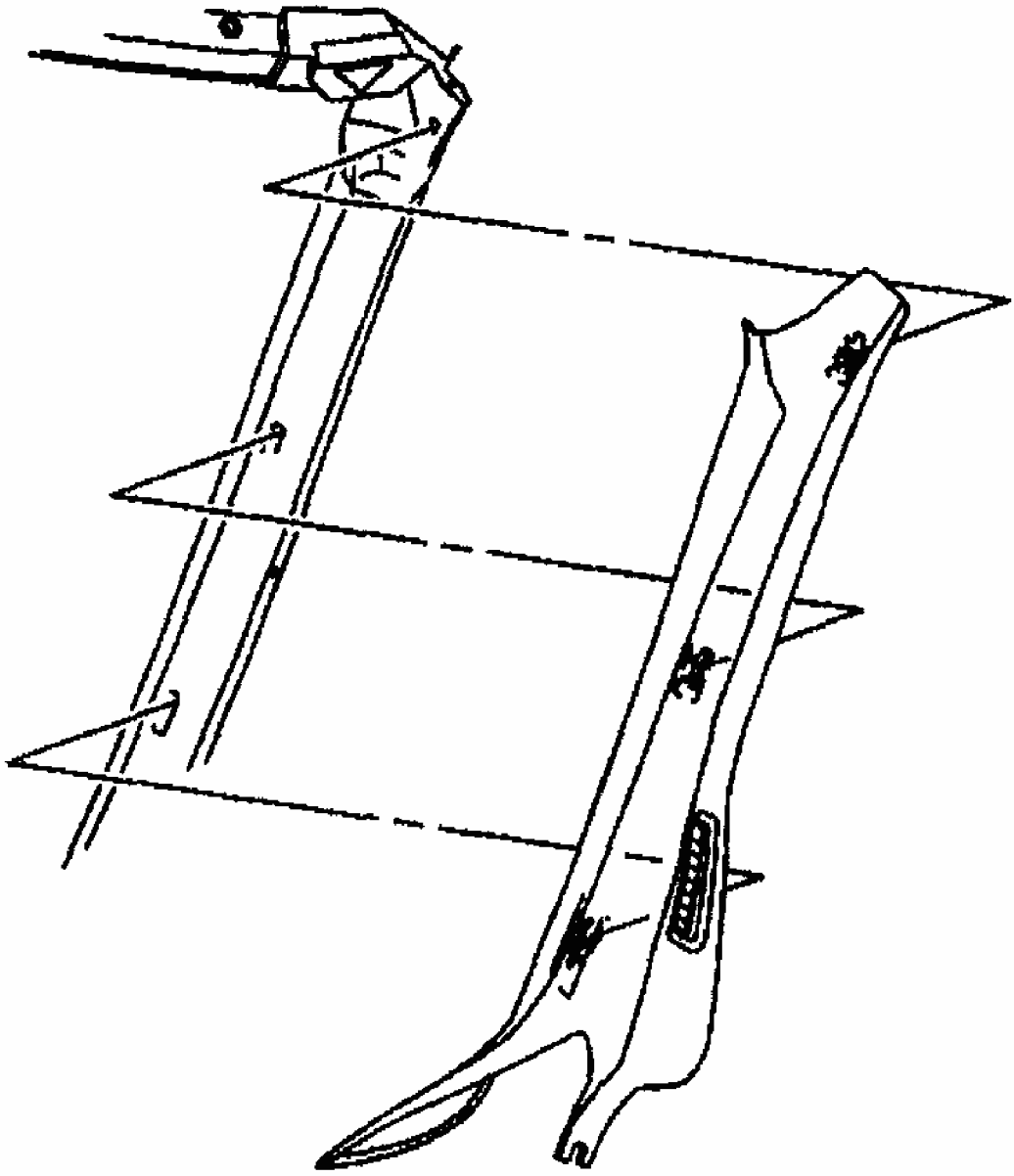

Fig. 159: Removing Windshield Upper Garnish Molding
Courtesy of GENERAL MOTORS CORP.

2. Remove the inside rearview mirror.

2.1. Disconnect the inside rearview mirror electrical connector.
2.2. Loosen the mirror mount tension screw.
2.3. Slide the mirror up off the mirror bracket.

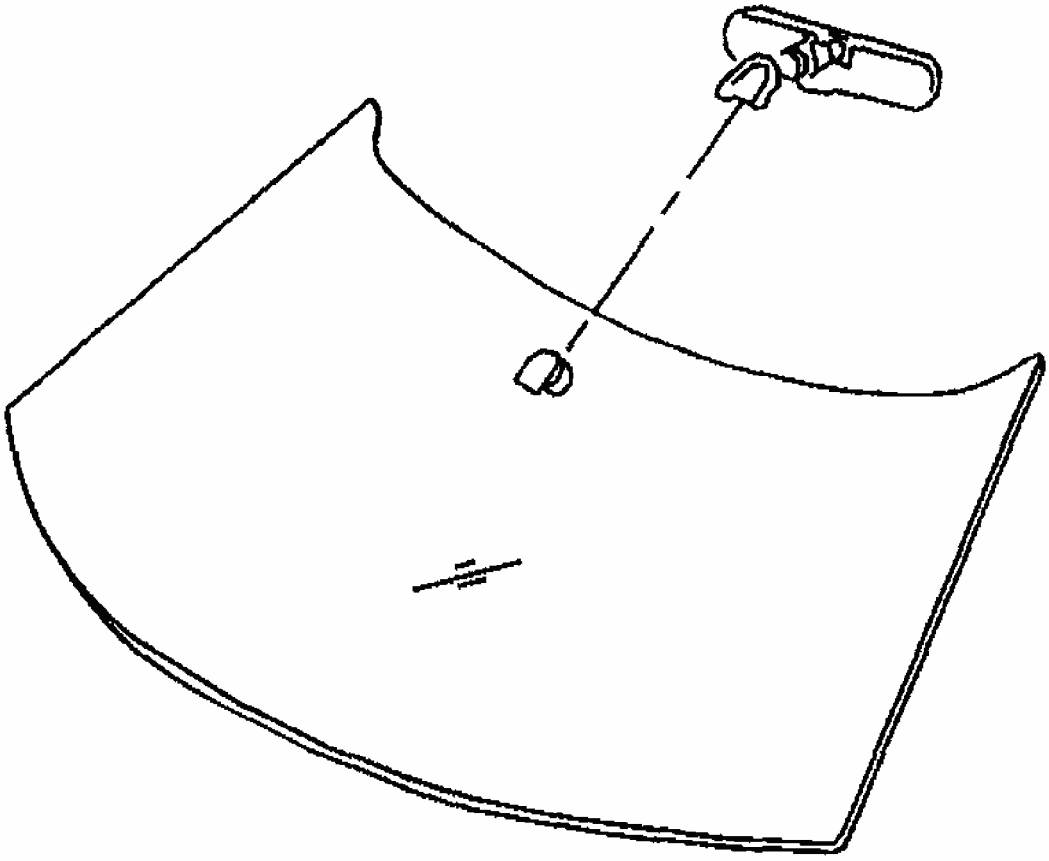

G01734483

Fig. 160: Removing Inside Rearview Mirror
Courtesy of GENERAL MOTORS CORP.

3. Remove the sunshades. Refer to **SUNSHADE REPLACEMENT** . in Interior Trim.

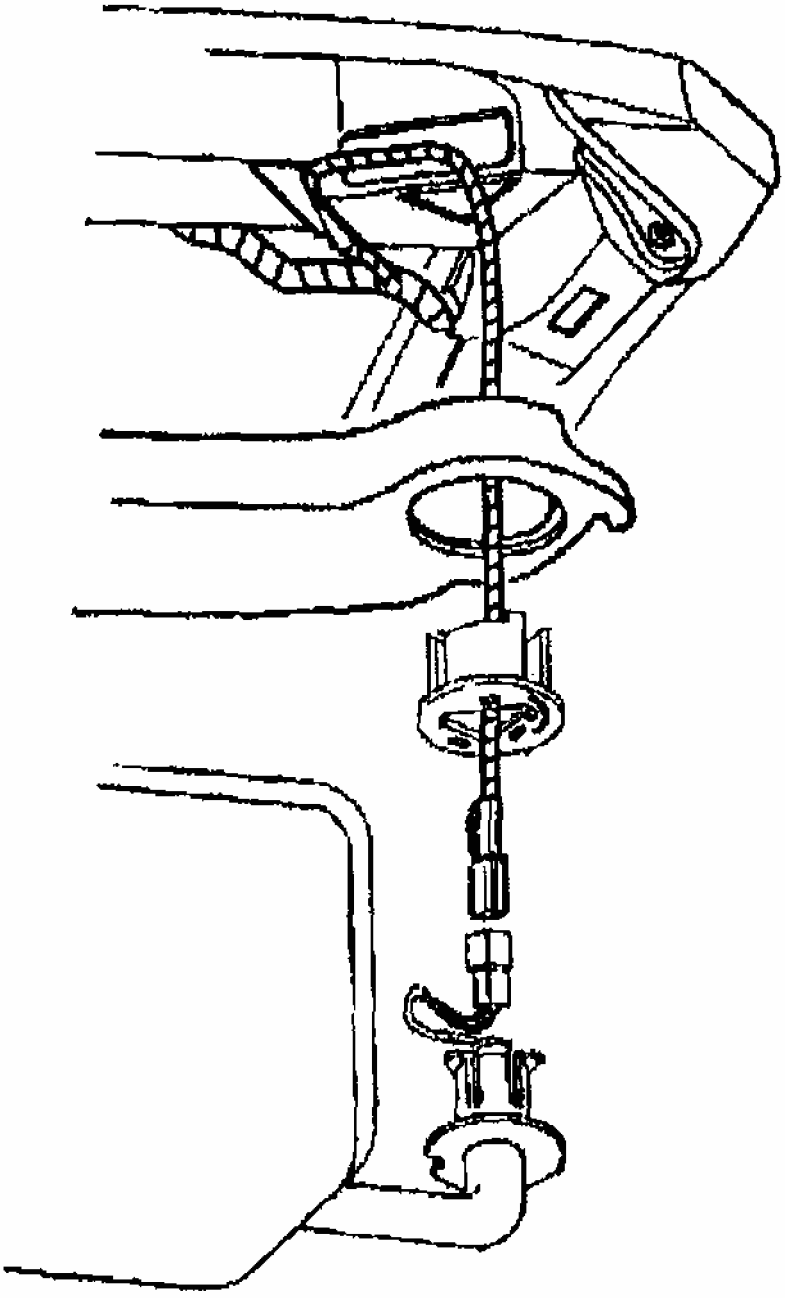

Fig. 161: Disconnecting Sunshade Electrical Connector
Courtesy of GENERAL MOTORS CORP.

4. Grasp the upper garnish molding and pull the garnish molding with its retainers from the windshield frame.

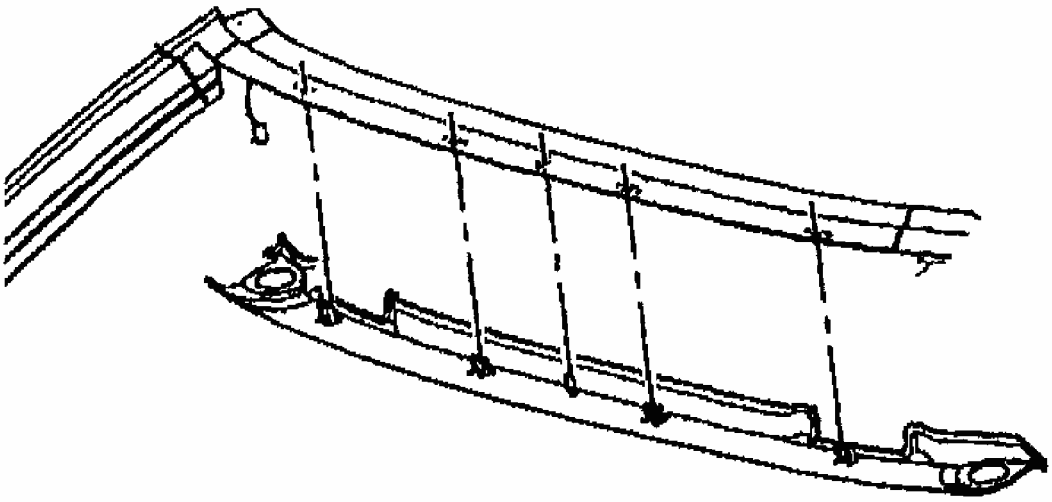

G01734485

Fig. 162: Removing Windshield Upper Garnish Molding & Retainers
Courtesy of GENERAL MOTORS CORP.

Installation Procedure

1. Position the sunshade electrical connectors through the openings in the upper garnish molding.

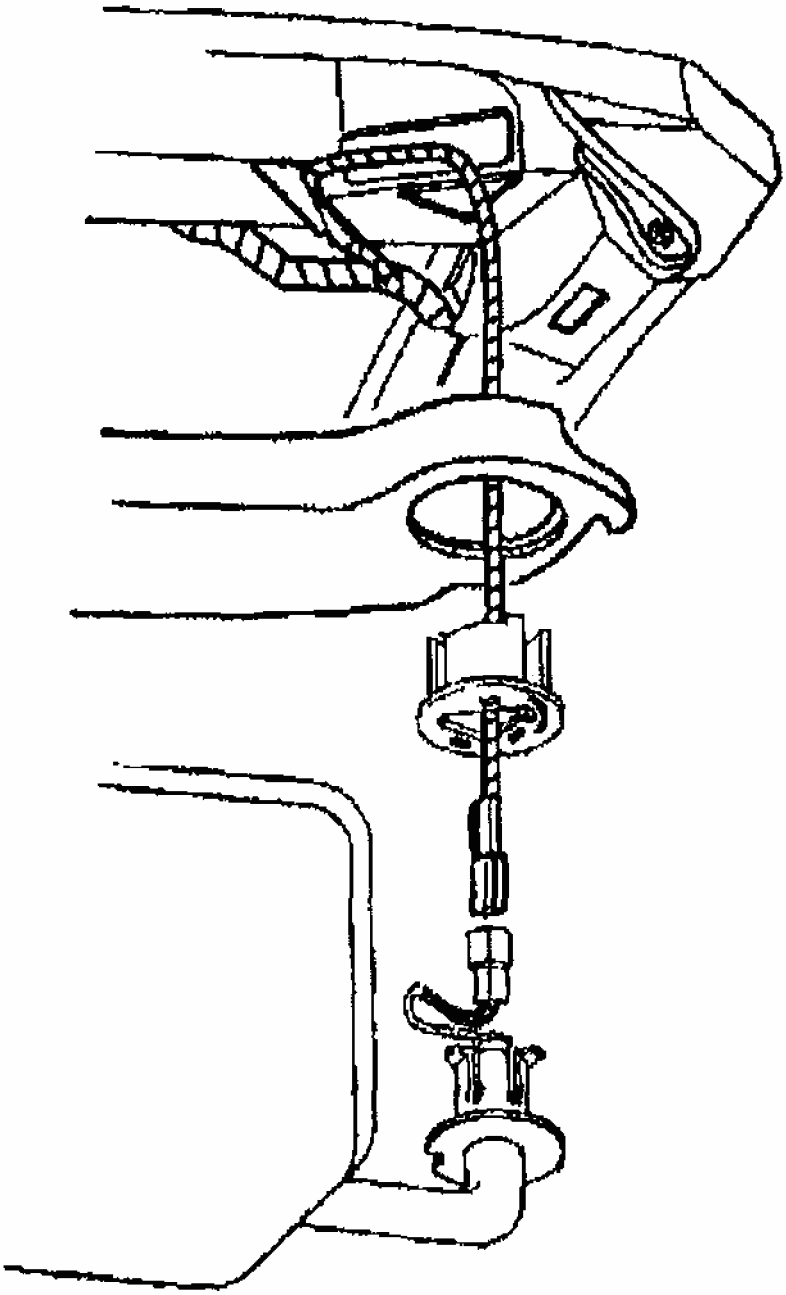

Fig. 163: Connecting Sunshade Electrical Connector
Courtesy of GENERAL MOTORS CORP.

2. Position the upper garnish molding with its retainers to the holes in the windshield frame.
3. Starting in the center push on the upper garnish molding snapping the molding retainers into the windshield frame.

4. Install the sunshades. Refer to **SUNSHADE REPLACEMENT** . in Interior Trim.

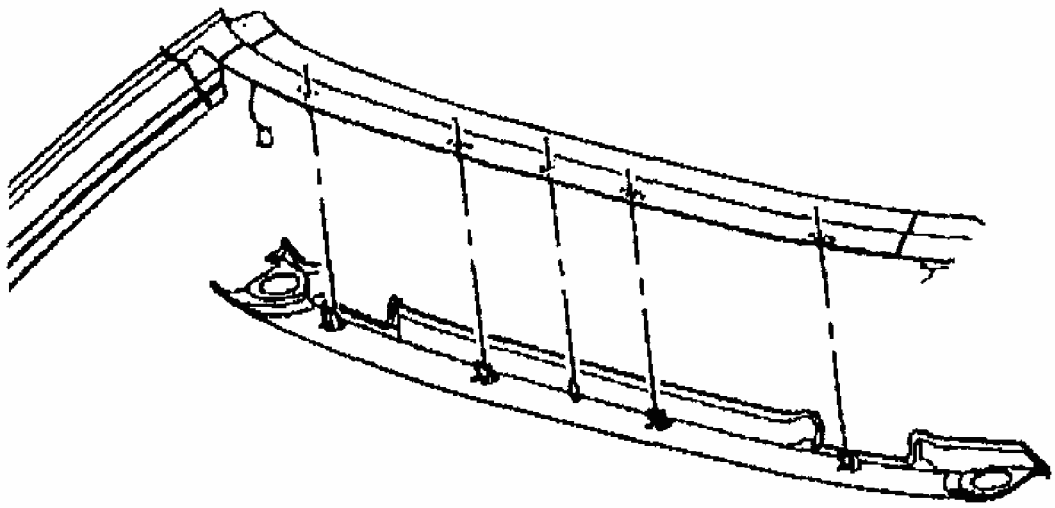

Fig. 164: Installing Windshield Upper Garnish Molding & Retainers
Courtesy of GENERAL MOTORS CORP.

5. Slide the rearview mirror down onto the bracket.

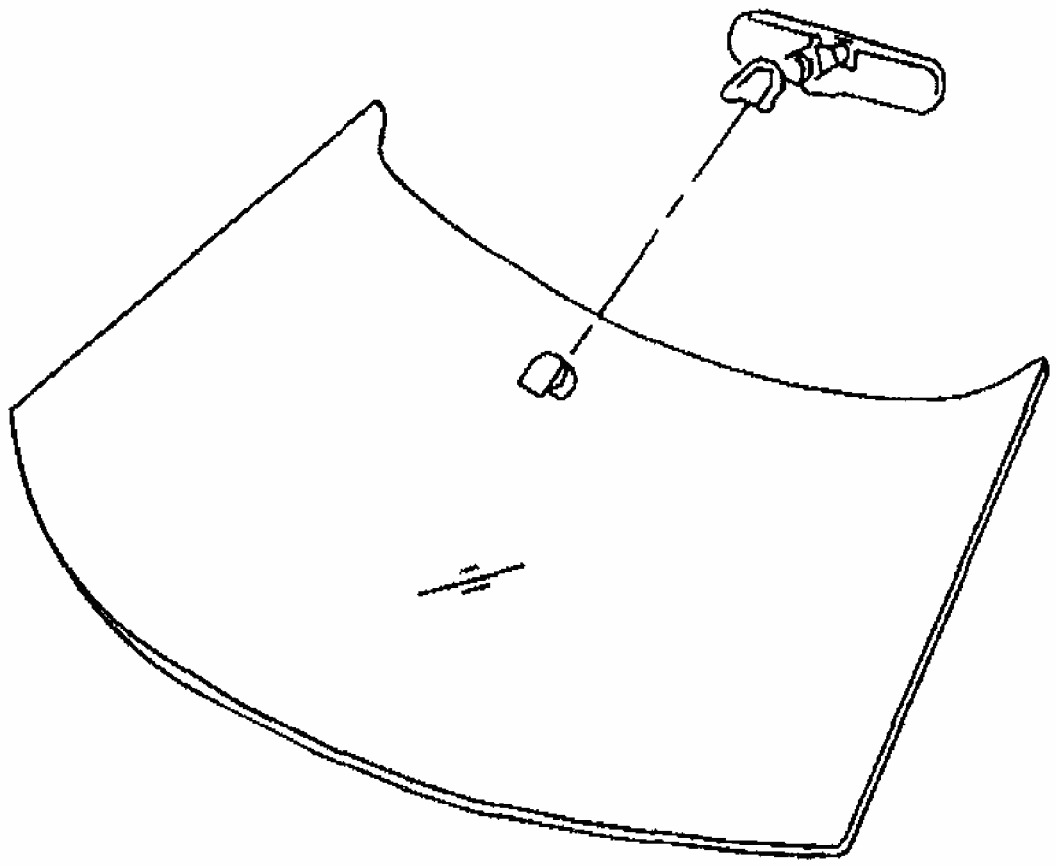

Fig. 165: Installing Inside Rearview Mirror
Courtesy of GENERAL MOTORS CORP.

6. Connect the electrical connector.

CAUTION: Refer to FASTENER NOTICE .

7. Tighten the mirror tension screw.

Tighten

Tighten the rearview mirror mount tension screw to 1.5 N.m (13 lb in).

8. Install the windshield side garnish moldings.
   8.1. Position the side garnish molding behind the lock pillar molding and retainer.
   8.2. Position the side garnish molding with its retainers to the holes in the

windshield frame.

8.3. Push on the molding snapping the retainers into the windshield frame.

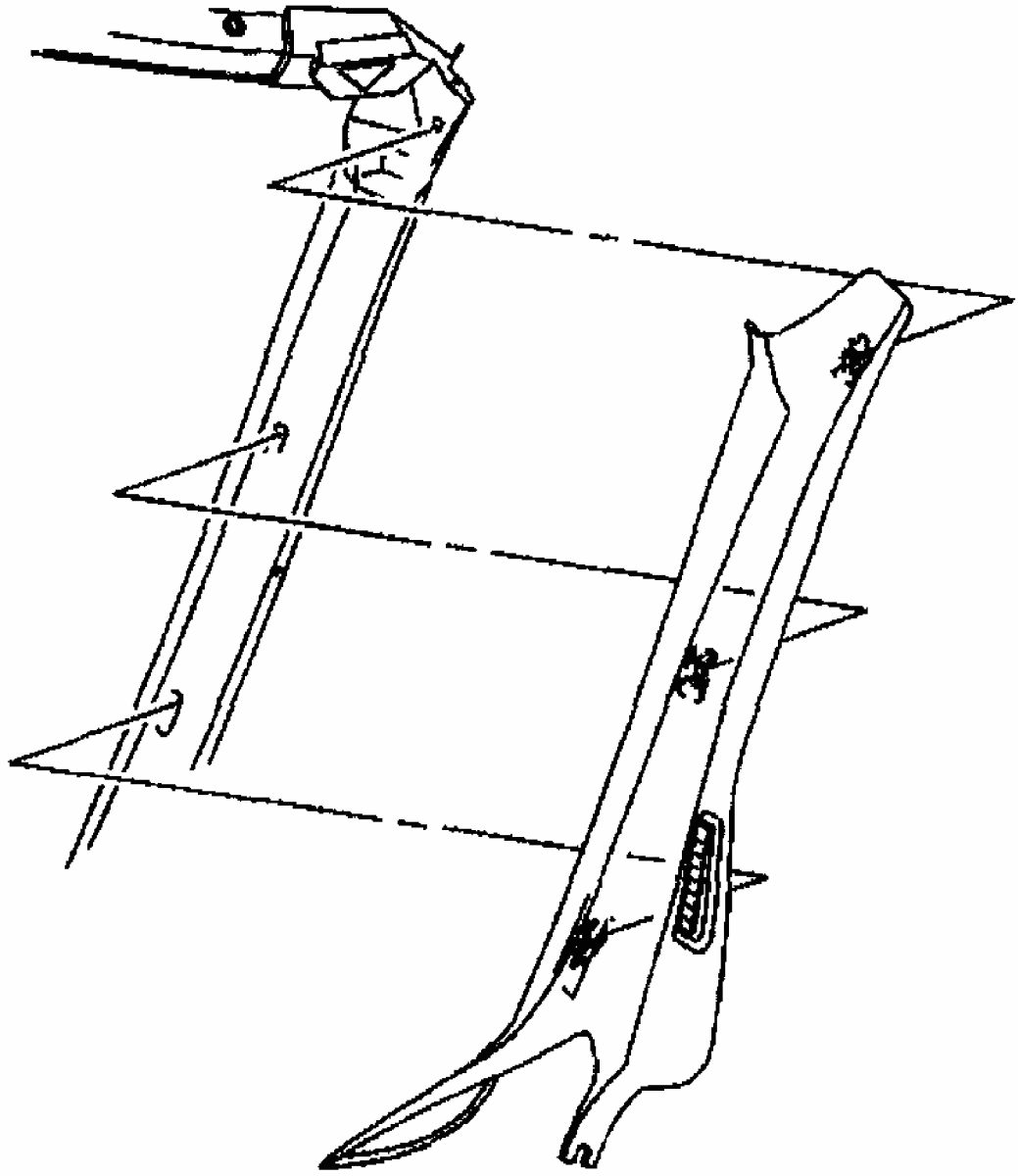

Fig. 166: Installing Windshield Upper Garnish Molding
Courtesy of GENERAL MOTORS CORP.

WINDSHIELD SIDE GARNISH MOLDING REPLACEMENT

Removal Procedure

1. Grasp the windshield side garnish molding with your hands.
2. Pull the molding with its retainers from the windshield frame.

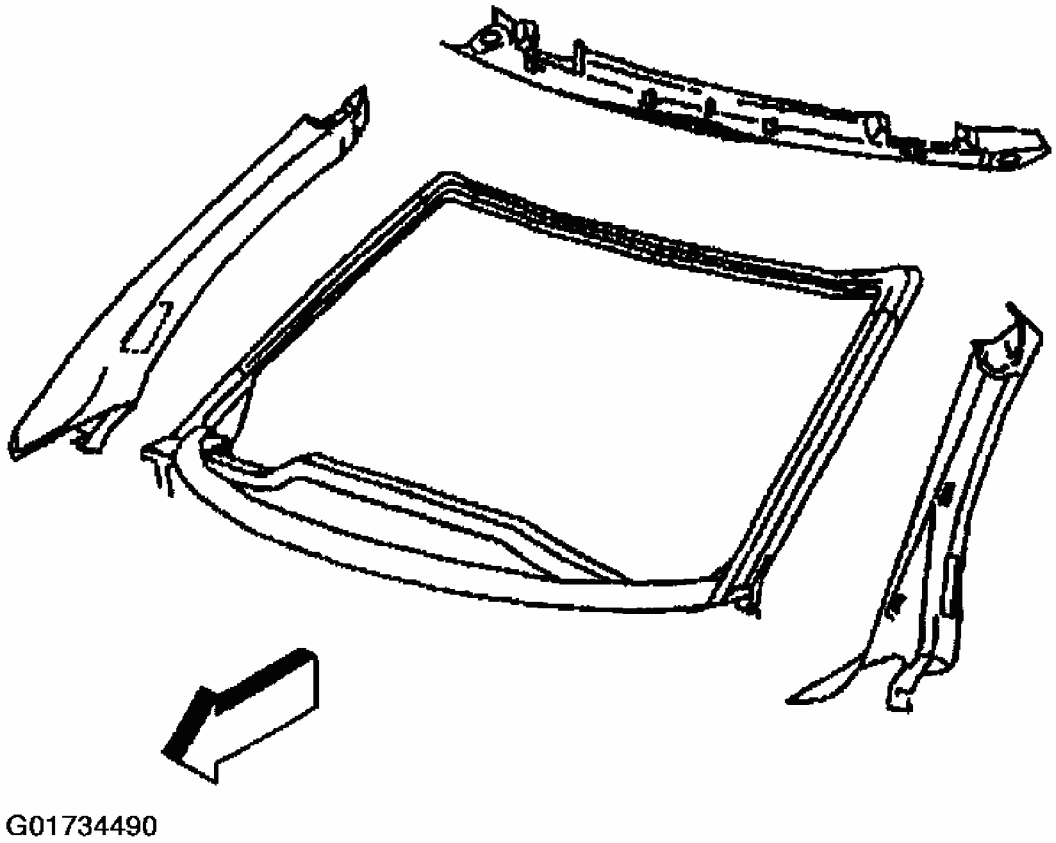

Fig. 167: Identifying Windshield Side Garnish Molding
Courtesy of GENERAL MOTORS CORP.

Installation Procedure

1. Position the window side garnish molding behind the lock pillar molding and retainer.
2. Position the window side garnish molding with its retainers to the holes in the windshield frame.
3. Push on the molding snapping the retainers into the windshield frame.

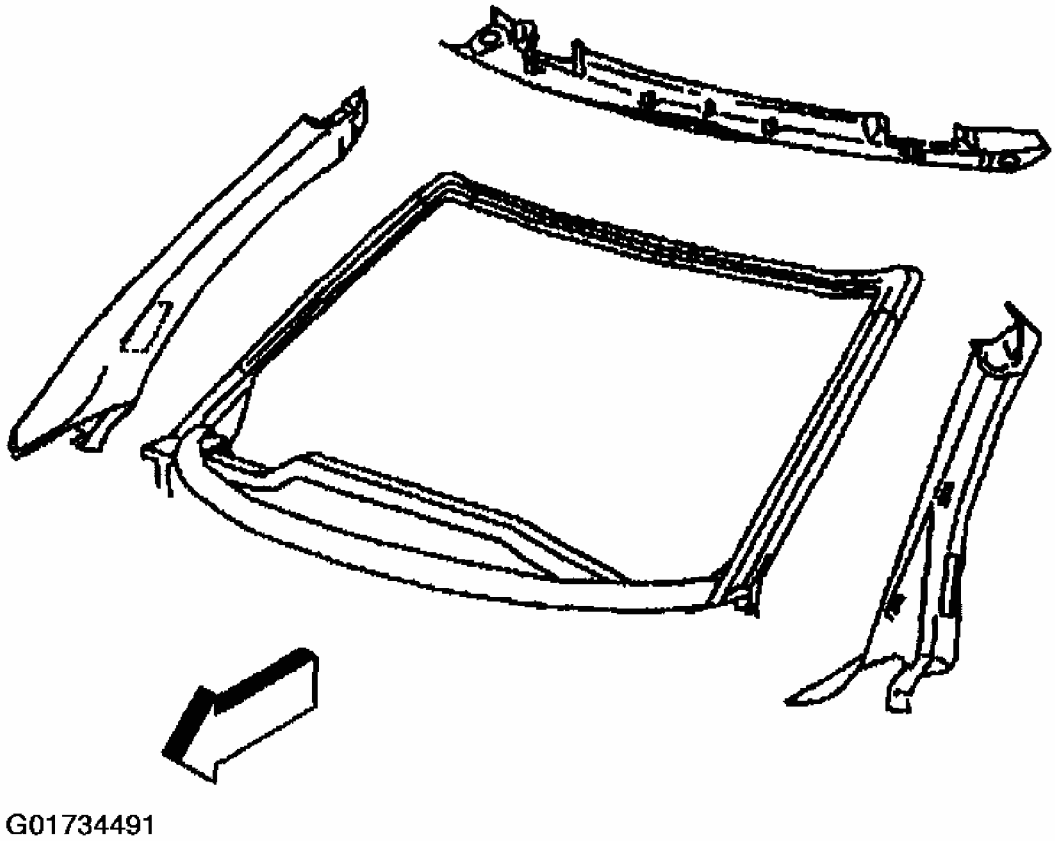

Fig. 168: Identifying Windshield Side Garnish Molding
Courtesy of GENERAL MOTORS CORP.